FORNO

Alta Qualita

FREESTANDING DUAL FUEL RANGE

Intertek
5015011

Conforms to UL STD 858 & CSA / ANSI STD Z21.1
Certified to CSA STDs C22.2#61 & CSA STD 1.1

INSTALLATION GUIDE
SPECIFICATIONS, INSTALLATION, AND MORE

MODEL NUMBERS:

FFSGS6125-30 FFSGS6125-30BLK FFSGS6125-30WHT	FFSGS6125-36 FFSGS6125-36BLK FFSGS6125-36WHT	FFSGS6125-48 FFSGS6125-48BLK FFSGS6125-48WHT	FFSGS6125-60

08/2025

Index

Customer Care	3
Warranty	4
Consumer Information	6
Anti-tip Device	6
Important Safety Information	7
Features of Your Range	11
Installation Instructions	12
Door Handle Installation	13
Cooktop Burner Grills Installation	13
Oven Rack Rail Installation	14
Electrical	14
Gas Supply	15
Electric Power Supply Requirements	16
Pressure Regulator	17
Gas Shut-off Valve (not included)	17
Product Dimensions and Cabinets Exhaust	18
Hood Installation	22
Gas Conversion Operation	22
Cooktop Operation	27
Ignition	27
Simmer and Boil	28
Burner Grills	28
Griddle Operation	28
Air Fryer	29
Cooktop Cleaning Tips	30
Oven Light	30
Oven Baking Operation	30
Oven Baking Tips	30
Electric Oven Functions	31
Oven Temperature Control & Cooking	32
Oven Cleaning Tips	32
Care and Maintenance Recommendation	32
Troubleshooting Tips	33
Please Read Before Using Your Oven	35
Wire Diagram	36

Customer Care

Thank you for purchasing a Forno product. Please read the entire instruction manual before operating your new appliance for the first time. Whether you are an occasional user or an expert, it will be beneficial to familiarize yourself with the safety practices, features, operation and care recommendations of your appliance.

Both the model and serial number are listed inside the product. For warranty purposes, you will also need the date of purchase .

Product Information

Model Number : _____

Serial Number : _____

Date of Purchase :_____

Purchase Address And Phone : _____

_____

_____

Service Information

Use these numbers in any correspondence or services calls concerning your product.

If you received a damaged product, immediately contact Forno.

To save time and money, before you call for serviced, check the troubleshooting guide. It listed the causes of minor operation problems that you can correct yourself.

“Need some quick help? Simply scan the qr code and get access to our fast support form. We’re always here to assist you with any questions or concerns you may have. So, don’t hesitate to reach out!”

Services in Canada and Untied States

Keep the instruction manual handy to answer your questions. If you don’t understand something or need more assistance, please visit our website for fast support. Please provide us your name, number, address,serial number of the product that troubleshooting, proof of purchase, and a short description of the issue. A customer service representative will contact you as soon as possible. All warranty work needs to be authorized by FORNO customer service. All our authorized service providers are carefully selected and rigorously trained by us.

Warranty

What this limited warranty covers:
The Warranty coverage provided by Forno Appliances in this statement applies exclusively to the original Forno appliance (“Product”) sold to the consumer (“Purchaser”) by an authorized Forno dealer/distributor/retailer, purchased and installed in the United States or Canada, and which has always remained within the original country of purchase (the United States or Canada). Warranty coverage is activated on the date of the Product's original retail purchase and has a duration of two (2) years. This warranty does not cover installation at the time of purchase or during replacement.

Warranty coverage is non-transferable. In the event of replacement of parts or of the entire product, the replacement Product (or parts) shall assume the remaining original Warranty activated with the original retail purchase document. This Warranty shall not be extended with respect to such replacement. Forno Appliances will repair or replace any component/part which fails or proves defective due to materials and/or workmanship within 2 years of the date of the original retail purchase and under conditions of ordinary residential, non-commercial use. Repair or replacement will be free of charge, including labor at standard rates and shipping expenses. Purchaser is responsible for making the Product reasonably accessible for service. Repair service must be performed by a Forno Authorized Service company during normal working hours.

IMPORTANT
Retain proof of original purchase to establish warranty period. Forno’s liability on any claim of any kind, with respect to the goods and/or services provided, shall in no event exceed the value of the goods or service or part there of which has given rise to the claim.

30-Day Cosmetic Warranty
The Purchaser must inspect the product at the time of delivery. Forno warrants that the Product is free from manufacturing defects in materials and workmanship for a period of thirty (30) days from date of the original retail purchase of the Product.
This coverage includes:
- Paint blemishes
- Chips
- Macroscopic finish defects

Cosmetic warranty does NOT cover:
> issues resulting from incorrect transport, handling and/or installation (e.g.: dents, broken, warped or deformed structures or components, cracked or otherwise damaged glass components);
> slight color variations on painted/enameled components;
> differences caused by natural or artificial lighting, location or other analogous factors;
> stains/corrosion/discoloration caused by external substances and/or environmental factors;
> labor costs, display, floor, B-stock, out- of-box,“as is” appliances and demo units.

How to receive service
To receive warranty services, the Purchaser must contact the Forno Support department in order to determine the problem and the required service procedures. Troubleshooting with a customer service representative will be necessary before moving forward with the service. Model number, serial number and date of original retail purchase will be requested.

Warranty Exclusions: What Is Not Covered.

> Use of the Product in any non-residential, commercial application.
> Use of the Product for anything other than its intended purpose.
> Repair services provided by anyone other than a Forno Authorized Service agency.
> Damages or repair services to correct services provided by unauthorized parties or the use of unauthorized parts.
> Installation not in accordance with local/state/city/county fire codes, electrical codes, gas codes, plumbing codes, building codes, laws or regulations.
> Defects or damage due to improper storage of the Product.
> Defects,damage or missing parts on products sold out of the original factory packaging or from displays.
> Service calls or repairs to correct an incorrect installation of the Product and/or related accessories.
> Replacement of parts/service calls to connect, convert or otherwise repair the electrical wiring and/or gas line in order to properly use the product.
> Replacement of parts/service calls to provide instructions and information on the use of the Product.
> Replacement of parts/service calls to correct issues arising from the product being used in a manner other than what is normal and customary for residential use.
> Replacement of parts/service calls due to wear and tear of components such as seals, knobs, pan supports, shelving, cutlery baskets, buttons, touch displays, scratched or broken ceramic-glass tops.
> Replacement of parts/service calls for lack of/improper maintenance, including but not limited to: build up of residues, stains, scratches, discoloration, corrosion.
> Defects and damages arising from accidents, alteration, misuse, abuse or improper installation.
> Defects and damages arising from Product transport, logistics and handling. Inspection of the product must be made at time of delivery. Following receipt and inspection, the selling dealer/delivery company must be notified of any issues arising from handling, transport and logistics.
> Defects and damages arising from external forces beyond the control of Forno Appliances, including but not limited to wind, rain, sand, fires, floods, mudslides, freezing temperatures, excessive moisture or extended exposure to humidity, power surges, lightning, structural failures surrounding the appliance and other acts of God.
> Products whose serial number has been altered/damaged/tampered with. In no case shall Forno be held liable or responsible for damage to surrounding property, including furniture, cabinetry, flooring, panels, and other structures surrounding the Product. Forno is neither liable nor responsible for the Product if it is located in a remote area or an area where certified trained technicians are not reasonably available. Purchaser must bear any transportation and delivery costs of the Product to the nearest Authorized Service Center or the additional travel expenses of a certified trained technician

THERE ARE NO EXPRESS WARRANTIES OTHER THAN THOSE LISTED AND DESCRIBED ABOVE, AND NO WARRANTIES, EITHER EXPRESS OR IMPLIED, INCLUDING, BUT NOT LIMITED TO, ANY IMPLIED WARRANTIES OF MERCHANTABILITY OR FITNESS FOR A PARTICULAR PURPOSE THAT SHALL APPLY AFTER THE EXPRESS WARRANTY PERIODS STATED ABOVE, AND NO OTHER EXPRESS WARRANTY OR GUARANTEE GIVEN BY ANY PERSON, FIRM OR CORPORATION WITH RESPECT TO THIS PRODUCT SHALL BE BINDING ON FORNO. FORNO SHALL NOT BE LIABLE FOR LOSS OF REVENUE OR PROFITS, FAILURE TO REALIZE SAVINGS OR OTHER BENEFITS, TIME AWAY FROM WORK, MEALS, LOSS OF FOOD OR BEVERAGES, TRAVELING OR HOTEL EXPENSES, EXPENSES TO RENT OR PURCHASE APPLIANCES, REMODELING/CONSTRUCTION EXPENSES IN EXCESS OF DIRECT DAMAGES WHICH ARE UNDENIABLY CAUSED EXCLUSIVELY BY FORNO OR ANY OTHER SPECIAL, INCIDENTAL OR CONSEQUENTIAL DAMAGES CAUSED BY THE USE, MISUSE OR INABILITY TO USE THIS PRODUCT, REGARDLESS OF THE LEGAL THEORY ON WHICH THE CLAIM IS BASED, AND EVEN IF FORNO HAS BEEN ADVISED OF THE POSSIBILITY OF SUCH DAMAGES. NOR SHALL RECOVERY OF ANY KIND AGAINST FORNO BE GREATER IN AMOUNT THAN THE PURCHASE PRICE OF THE PRODUCT SOLD BY FORNO AND CAUSING THE ALLEGED DAMAGE.WITHOUT PREJUDICE TO THE FOREGOING, PURCHASER ASSUMES ALL RISK AND LIABILITY FOR LOSS, DAMAGE OR INJURY TO PURCHASER AND PURCHASER'S PROPERTY AND TO OTHERS AND THEIR PROPERTY ARISING FROM THE USE, MISUSE, OR INABILITY TO USE THIS PRODUCT SOLD BY FORNO THAT IS NOT A DIRECT RESULT OF NEGLIGENCE ON THE PART OF FORNO THIS LIMITED WARRANTY SHALL NOT EXTEND TO ANYONE OTHER THAN THE ORIGINAL PURCHASER OF THIS PRODUCT, IS NON-TRANSFERABLE, AND STATES YOUR EXCLUSIVE REMEDY.

Consumer information

Range Safety

Your safety and the safety of others are very important.

We have provided many important safety messages in this manual and on your appliance. Always read and obey all safety messages.

⚠	This is a safety alert symbol. It will alert you to potential personal or property safety hazards. Obey all safety messages to avoid any property damage, personal injury or death.
⚠WARNING	**WARNING** indicates a potentially hazardous situation which, if not avoided, could result in serious injury or death.
⚠CAUTION	**CAUTION** indicates a moderate hazardous situation which, if not avoided, could result in minor or moderate injury. All safety messages will alert you what the potential hazard is, tell you how to reduce the chance of injury, and let you know what can happen if the instructions are not followed.

⚠WARNING

If the information in this manual is not followed exactly, a fire or explosion may result, causing property damage, personal injury or death.

Do not store or use gasoline or other flammable vapors and liquids in the vicinity of this or any other appliance.

- WHAT TO DO IF YOU SMELL GAS

- Do not try to light any appliance.
- Do not touch any electrical switch.
- Do not use any phone in your building.
- Immediately call your gas supplier from a neighbor's phone. Follow the gas supplier' sinstructions.
- If you cannot reach your gas supplier, call the fire department.

Installation and service must be performed by a qualified installer, service agency or the gas supplier.

ANTI-TIP DEVICE

⚠WARNING

Tip-over Hazard

A Child or adult can tip the range which can result in serious injuries or death.
Install the anti-tip device to the range and/or structure per installation instructions.
Engage the range to the Anti-tip device installed to the structure.
Re-engage the anti-tip device if the range is removed.
Failure to follow these instructions can result in death or serious injuries and/or burns to children and adults.

To reduce the risk of tipping the range, the range must be secured by properly installed anti-tip device packed with the range. See installation instructions shipped with the bracket for complete details before attempting to install.

All ranges can tip and cause injuries.

Make sure the anti-tip bracket is installed.

Slide range forward.
Make sure the anti-tip bracket is securely attached
to the wall behind the range.

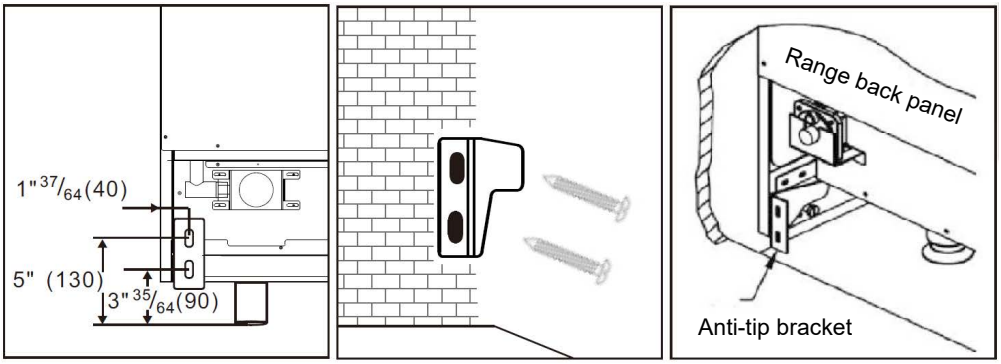

⚠ WARNING

This product can expose you to chemicals including carbon monoxide, which is known to the State of California to cause developmental harm.

For more information go to www.P65Warnings.ca.gov

The installation must conform with local codes or, in the absence of local codes, with the National Fuel Gas Code, ANSI Z223.1/NFPA 54 or, in Canada, the Natural Gas and Propane Installation Code, CSA B149.1.

⚠WARNING

Never operate the top surface cooking section of the appliance unattended
Failure to follow this warning statement may result in fire, explosion or burn hazard that could cause property damage, personal injury or death.
If a fire should occur, keep away from the appliance and immediately call your fire department.
DO NOT ATTEND TO EXTINGUISH AN OIL/GREASE FIRE WITH WATER

IMPORTANT SAFETY INFORMATION

READ ALL INSTRUCTIONS BEFORE USING THE APPLIANCE

⚠WARNING Read all safety instructions before using the product. Failure to follow these instructions may result in fire, electrical shock, serious injury or death.

GENERAL SAFETY INSTRUCTIONS

⚠WARNING NEVER use this appliance as a space heater to heat or warm the room. Doing so may result in carbon monoxide poisoning and overheating of the oven.

1. Use this range for its intended purpose as described in this instruction manual.
2. Have your range installed and properly grounded by a qualified installer in accordance with the provided installation instructions.

3. Any adjustment and service should be performed only by a qualified gas range installer or service technician. Do not attempt to repair or replace any part of your range unless it is specifically recommended in this manual.
4. Your range is shipped from the factory set for use with natural gas or propane (LP) gas. It can be converted for use with either. If required, these adjustments must be made by a qualified technician in accordance with the installation instructions and local codes. The agency performing this work assumes responsibility for the conversion.
5. Have the installer show you the location of the range gas shut-off valve and how to turn it off if necessary.
6. Plug your range into a 240-volt grounded outlet only. Do not removed the round grounding prong from the plug. If in doubt about the grounding of the home electrical system, it is your responsibility and obligation to have an ungrounded outlet in accordance with the National Electrical Code. Do not use an extension code with this range.
7. Before performing any service, unplug the range or disconnect the power supply at the household distribution panel by removing the fuse or switching off the circuit breaker.
8. Be sure all packing materials are removed from the range before operating to prevent ignition of these materials.
9. Avoid scratching or impacting glass displays. Doing so may lead to glass breakage. Do not cook on a product with broken glass. Shock, fire, or cuts may occur.
10. Do not leave children alone or unattended in an area where an appliance is in use. They should never be allowed to climb, sit or stand on any part of the range.
11. **⚠CAUTION** Do not store items of interest to children in cabinets above an oven-children who climb onto the oven to reach items could be seriously injured.
12. Never block the vents (air openings) of the range. They provide the air inlets and outlets that are necessary for the range to operate properly with correct combustion. Air openings are located at the rear of the cooktop, at the top and bottom of the oven door, and at the bottom of the range.
13. Use only dry pot holders--moist or damp pot holders on hot surfaces may result in burns from steam. Do not let pot holders touch surface burners, burner grate, or oven heating element. Do not use a towel or other bulky fabrics in place of pot holders.
14. Do not touch the heating elements or the interior surface of the oven. These surfaces may be hot enough to burn even though they are dark in color. During and after use, do not touch, or let clothing or other flammable materials contact any interior area of the oven; allow sufficient time for cooling first. Other surfaces of the appliance may become hot enough to cause burns. Potentially hot surfaces include the burners, grates, oven vent opening, surfaces near the opening, crevices around the oven door, metal trim parts above the door, any back guard, or high shelf surface.
15. Do not heat unopened food containers. Pressure could build up and the container could burst, causing any injury.

⚠WARNING **Extremely Heavy.**

Proper equipment and adequate manpower are needed when move the range to avoid personal injury or damage to the unit or the floor.
Failure to follow this advice may result in damage or personal injury.

WARNING DO NOT carry or lift the cooking range by the oven door handle or the control panel!

CORRECT

INCORRECT

INCORRET

WARNING Never pour cold water to hot surfaces in a hot oven. The steam created could cause serious burns or scalding and the sudden change in temperature can damage the enamel in the oven.

WARNING Cook food thoroughly to help protect against foodborne illness. Minimum safe food temperature recommendations can be found at www.IsItDoneYet.gov and www.fsis.usda.gov. Use a food thermometer to take food temperatures and check several locations.

Do not allow anyone to climb, stand or hang on the oven door, drawer or cooktop. They could damage the range or tip it over causing severe injury or death.

Keep the ventilator hood and grease filter clean to maintain good venting and to avoid grease fires. Turn the ventilator OFF in case of a fire or when intentionally "flaming" liquor or other spirits on the cooktop. The blower if in operation, could spread the flames.

WARNING KEEP FLAMMABLE MATERIAL AWAY FROM THE RANGE

Failure to do so may result in fire or personal injury.

Do not store or use flammable materials in an oven or near the cooktop, including paper, plastic, pot holders, linens, wall coverings, curtains, drapes and gasoline or other flammable vapors and liquids.

Never wear loose-fitting or hanging garments while using the appliance. These garments may ignite if they contact hot surfaces causing severe burns.

Do not let cooking grease or other flammable materials accumulate in or near the range. Grease in the oven or on the cooktop may ignite.

WARNING IN THE EVENT OF A FIRE, TAKE THE FOLLOWING STEP TO PREVENT INJURY AND FIRE SPREADING.

Do not use water on grease fires. Never pick up a flaming pan. Turn the controls off. Smother a flaming pan on a surface unit by covering the pan completely with a well-fitting lid, cookie sheet or flat tray. Use a multi-purpose dry chemical or foam-type fire extinguisher.

If there is a fire in the oven during baking, smother the fire by closing the oven door and turning the oven off or by using a multi-purpose dry chemical or foam-type fire extinguisher. If there is a fire in the oven during self-clean, turn the oven off and wait for the fire to go out. Do not force the door open.

Introduction of fresh air at self-clean temperatures may lead to a burst of flame from the oven. Failure to follow this instruction may result in severe burns.

⚠WARNING COOKTOP SAFETY INSTRUCTIONS

Never leave the surface burners unattended at medium or high heat settings. Foods, especially oily foods, may ignite resulting in fire that could spread to surrounding cabinets.

Never leave oil unattended while frying. If allowed to heat beyond its smoking point, oil may ignite resulting in fire that may spread to surrounding cabinets. Use a deep fat thermometer whenever possible to monitor oil temperature.

To avoid oil spillover and fire, use the minimum amount of oil when frying in a shallow pan and avoid cooking frozen foods with excessive amounts of ice.

Use proper pan size and avoid pans that are unstable or easily tipped. Select cookware that matches the size of the burner. Burner flames should be adjusted so that they do not extend beyond the bottom of the pan. Excessive flames may be hazardous.

When using glass/ceramic cookware, make sure it is suitable for cooktop use; others may break because of a sudden change in temperature.

To minimize the possibility of burns, ignition of flammable materials and spillage, cookware handles should be turned toward the center of the range without extending over nearby burners.

Do not use a wok with a round metal support ring. The ring may trap heat and block air to the burner resulting in a carbon monoxide hazard.

Do not attempt to lift the cooktop. Doing so may damage the gas tubing to the surface burners resulting in a gas leak and risk of fire.

Do not use aluminum foil to cover the grills or line any part of the cooktop. Doing so may result in carbon monoxide poisoning, overheating of the cooktop surfaces, or a potential fire hazard.

⚠WARNING OVEN SAFETY INSTRUCTIONS

NEVER cover any slots, holes, or passages in the oven bottom or cover an entire rack with materials such as aluminum foil or oven liners. Never place foil or oven liners on the oven bottom. They can trap heat causing risk of smoke or fire. Stand away from the range when opening the oven door. Escaping hot air or steam can cause burns to hands, face and/or eyes.

Never place cooking utensils, pizza or baking stones, or any type of foil or liner on the oven floor. These items can trap heat or melt, resulting in damage to the product and risk of shock, smoke or fire.

Place oven racks in desired location while oven is cool. If the rack must be moved while the oven is hot, be careful to avoid touching hot surfaces.

Do not leave items such as paper, cooking utensils, or food in the oven when not in use. Items stored in an oven can ignite.

Do not leave items on the cooktop near the oven vent. Items may overheat resulting in a risk of fire or burns.

Never broil with the door open. Open-door broiling is not advised due to overheating of control knobs.

Features of Your Range

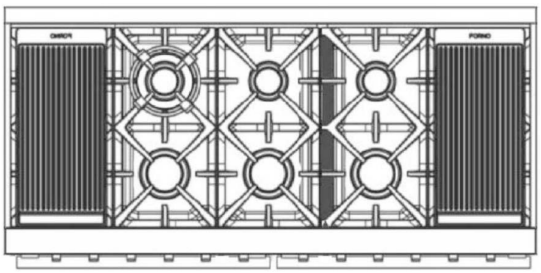 10 burners	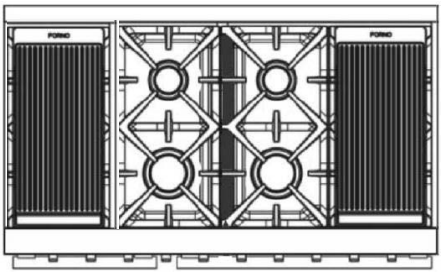 8 burners
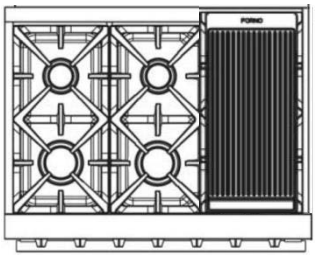 6 burners	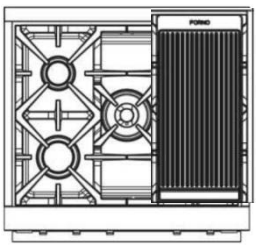 5 burners

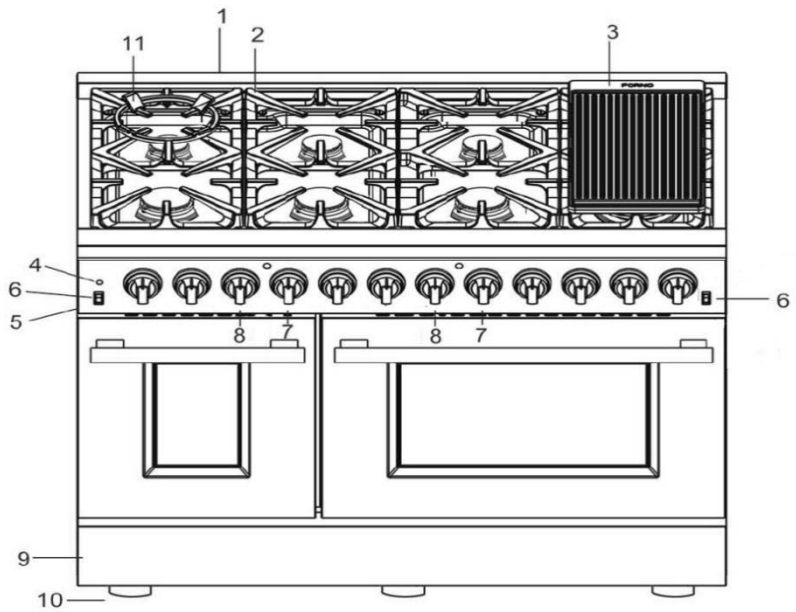

Not all features are on all models. Appearance may vary.

1	Oven Vents
2	Cooktop Burner Grills
3	Griddle (1x for 30"- 36"| 2x for 48"- 60")
4	LED Light Switch
5	Control Panel
6	Oven Lights Switch
7	Broil/Oven Control Knob
8	Temperature Control Knob
9	Kick Panel
10	Leveling System(Oven legs)
11	Wok Support

Installation Instructions

Before using your range

1. Remove all packaging material.
2. Check to make sure you have all of the accessories listed below

1.18, 0.9, 0.46	LPG injector	FFSGS6125-30 FFSGS6125-30BLK FFSGS6125-30WHT	7 sets
		FFSGS6125-36 FFSGS6125-36BLK FFSGS6125-36WHT	8 sets
		FFSGS6125-48 FFSGS6125-48BLK FFSGS6125-48WHT	10 sets
		FFSGS6125-60	14 sets
	Anti-tip bracket and screws (*2 sets for FFSGS6125-60)		1 set
	Wall-against mat		2 pieces
	Burner Grills	FFSGS6125-30 FFSGS6125-30BLK FFSGS6125-30WHT	2 pieces
	Burner Grills	FFSGS6125-36 FFSGS6125-36BLK FFSGS6125-36WHT	3 pieces
		FFSGS6125-48 FFSGS6125-48BLK FFSGS6125-48WHT	3 pieces
		FFSGS6125-60	3 pieces
	Burner Grills	FFSGS6125-48 FFSGS6125-48BLK FFSGS6125-48WHT	1 piece
		FFSGS6125-60	2 piece
	Cook plate (Griddle)	FFSGS6125-30 FFSGS6125-30BLK FFSGS6125-30WHT	1 piece
		FFSGS6125-36 FFSGS6125-36BLK FFSGS6125-36WHT	1 piece
		FFSGS6125-48 FFSGS6125-48BLK FFSGS6125-48WHT	2 pieces
		FFSGS6125-60	2 pieces
	Wok Support		1 piece
	Oven door handle (*2 pcs for FFSGS6125-48 FFSGS6125-48BLK FFSGS6125-48WHT and FFSGS6125-60)		1 piece
	Burner & Cap (9000BTU)	FFSGS6125-30 FFSGS6125-30BLK FFSGS6125-30WHT	2 sets
		FFSGS6125-36 FFSGS6125-36BLK FFSGS6125-36WHT	2 sets
		FFSGS6125-48 FFSGS6125-48BLK FFSGS6125-48WHT	3 sets
		FFSGS6125-60	3 sets
	Burner & Cap (15000BTU)	FFSGS6125-30 FFSGS6125-30BLK FFSGS6125-30WHT	2 sets
		FFSGS6125-36 FFSGS6125-36BLK FFSGS6125-36WHT	3 sets
		FFSGS6125-48 FFSGS6125-48BLK FFSGS6125-48WHT	4 sets
		FFSGS6125-60	5 sets
	Burner & Cap (20000BTU)	FFSGS6125-36 FFSGS6125-36BLK FFSGS6125-36WHT	1 set
		FFSGS6125-48 FFSGS6125-48BLK FFSGS6125-48WHT	1 set
		FFSGS6125-60	2 sets
	Baking rack (*4 pcs for FFSGS6125-48 FFSGS6125-48BLK FFSGS6125-48WHTand FFSGS6125-60)		2 sets

	Air fry Basket Baking Pan	1 set
	Regulator (pre-installed)	1 piece
	Serial Number Sticker & Instruction Manual	1 set
	Cord plug (pre-installed)	1 piece

YOU NEED TOOLS FOR INSTALLATION. (not supplied with the range)

Screwdriver	Wrench	Socket wrench	Allen key	Tape measure &Pencil
Protective gloves	Hammer	Adjustable wrench	Adjustable pliers	Drill

Door handle installations

The door handle is not pre-installed. Follow the illustrations below to install the door handle quickly and easily.

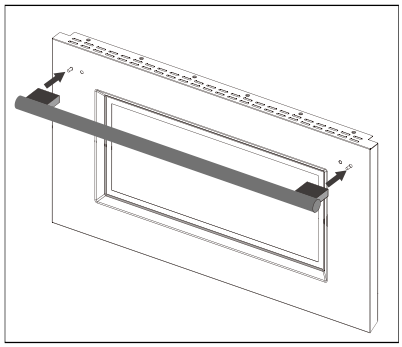

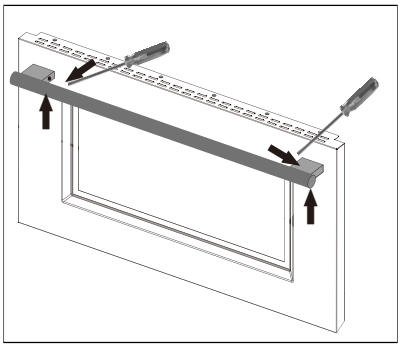

1.Align the handle with the screw on the door.

2.Then tighten the hexagon socket screws on the handle with a hexagon socket screwdriver.

Cooktop Burner Grills Installation

Remove the packing materials from the cooktop burner grills. Place the burner grills to the correct position. Check the direction of middle grill on the right as illustrated, the thicker side should be towards the left.

Put the cook plate (for 48" models and 60" model) and the wok support to the burner(s) you like to cook.

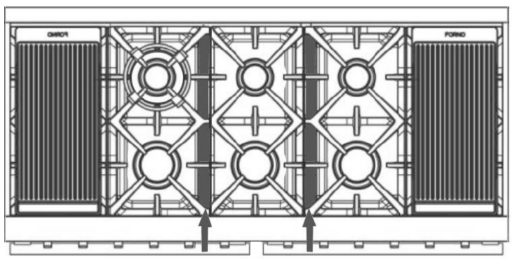

60" 48"
60"

Oven rack rail installation

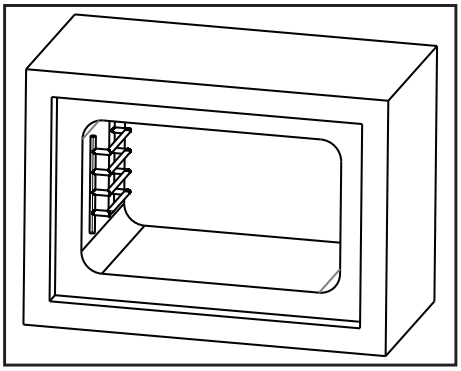

1-Open the oven door

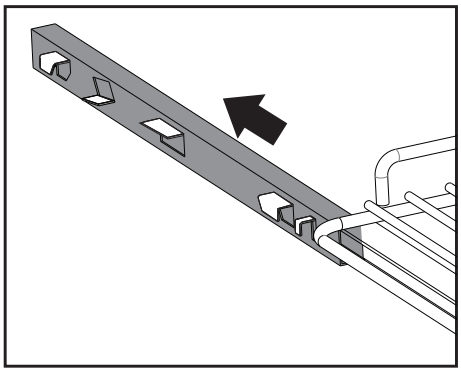

2- Pull the rail outwards

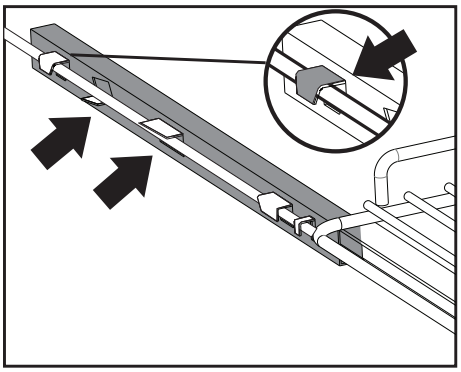

3- Make sure the first hinge slides on top of the arm, the second hinge at the bottom, and the two front should be on the top of the arm. Push the rack completely towards the back. This complete the installation.

Electrical

Your range must be electrically grounded in accordance with local codes or, in the absence of local codes, in accordance with the National Electrical Code (ANSI/NFPA 70, latest edition). In Canada, electrical grounding must be in accordance with the current CSA C22.1 Canadian Electrical Code Part 1 and/or local codes.

The power supply must be the correct polarity. Reverse polarity will result in continuous sparking of the electrodes, even after flame ignition. If there is any doubt as to whether the power supply has the correct polarity or grounded, have it checked by a qualified electrician.

ELECTRICAL REQUIREMENTS

Electrical Supply	Grounded, 240 VAC, 60Hz		
Service	2/C 8AWG+2/C 10AWG		
Receptacle	4-prong grounding-type		
PowerCord	3.9' (1.2m)		
Max Connected Load			
FFSGS6125-30	FFSGS6125-30WHT	FFSGS6125-30BLK	3.6kW
FFSGS6125-36	FFSGS6125-36WHT	FFSGS6125-36BLK	3.6kW
FFSGS6125-48	FFSGS6125-48WHT	FFSGS6125-48BLK	7.025kW
FFSGS6125-60			7.2kW

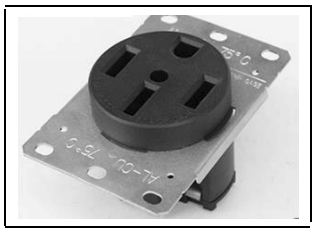

Socket

⚠WARNING

Electrical grounding Instructions: This range is equipped with a four-prong (grounding) plug for your protection against shock hazard and should be plugged directly into a properly grounded four-prong receptacle.

Do not cut or remove the grounding pin from the plug.

⚠CAUTION Label all wires prior to disconnection when servicing controls. Wiring errors can cause improper and dangerous operation. Verify proper operation after servicing.

Grounding

The power cord is equipped with a four-prong (grounding) plug which mates with a standard four-prong grounding wall receptacle to minimize the possibility of electrical shock hazard from the range.
All cord connected appliance shall include instructions relative to location of the wall receptacle and a warning to the user to disconnect the electrical supply before serving the appliance.
Where a standard three-prong wall receptacle is encountered, it is the responsibility and obligation of the customer to have it replaced with a properly grounded four-prong wall receptacle. Do not cut or remove the grounding prong from the power cord.

ELECTRICAL SHOCK HAZARD Disconnect electrical power at the circuit breaker box or fuse box before installing the appliance. Provide appropriate ground for the appliance. Use copper conductors only. Failure to follow these instructions could result in serious injury or death.

Wire Connection:

1. Connect the L1 receptacle terminal to the incoming RED electrical supply wire (L1-hot wire).
2. Connect the L2 receptacle terminal to the incoming BLACK electrical supply wire (L2-hot wire).
3. Connect the NEUTRAL receptacle terminal to the incoming NEUTRAL (WHITE) electrical supply wire.
4. Connect the GROUND receptacle terminal to the incoming GROUND (GREEN) electrical supply wire.

This appliance is equipped at the factory with an electric supply cord set 4 wires type with ring terminals (L1, L2, N, Ground) suitable for range use UL/CSA listed type SRDT/DRT 2X8AWG (L1, L2) + 2X10AWG (N,G) rated 300V, 40A with fused plug type NEMA 14-50P; cable length 1.2m; in case the supply cord set must be replaced, it shall be replaced with an identical set having the same technical specs and following carefully the instructions and diagrams from the last 3 pages of this manual.

Gas Supply

Installation must comply with local codes or, in the absence of local codes, with the National Fuel Gas Code, ANSI Z223.1 / NFPA 54. In Canada, installation must conform to the current natural Gas Installation /code, CAN 1-1.1-M81 and with local codes where applicable.
This range has been design-certified according to ANSI Z21.1b-2012 latest edition.

GAS REQUIREMENTS

NATURAL GAS	WC
Regulator Pressure	5" (12.5 mb)
Minimum Supply Pressure	6"
Maximum Supply Pressure	14" (34.9 mb), 0.5 psi (3.5 kPa)

LP GAS	WC
Regulator Pressure	10" (25 mb)
Minimum Supply Pressure	11"
Maximum Supply Pressure	14" (34.9 mb), 0.5 psi (3.5 kPa)

The min and max gas supply pressure stands for the pressure at the Gas Shut-Off Valve.

⚠WARNING Do not obstruct the flow of combustion air into the range and ventilation air away from the range.

Ventilation: it is recommended that the unit be operated with an oven head, vented exhaust hood of sufficient size and capacity.

Electric Power Supply Requirements

Your unit is equipped with a small cavity located at the lower back, which is specifically designed to accommodate all your electric and gas requirements for a seamless flush-to-wall installation. It is important to ensure that all components are positioned below the measurements provided below.

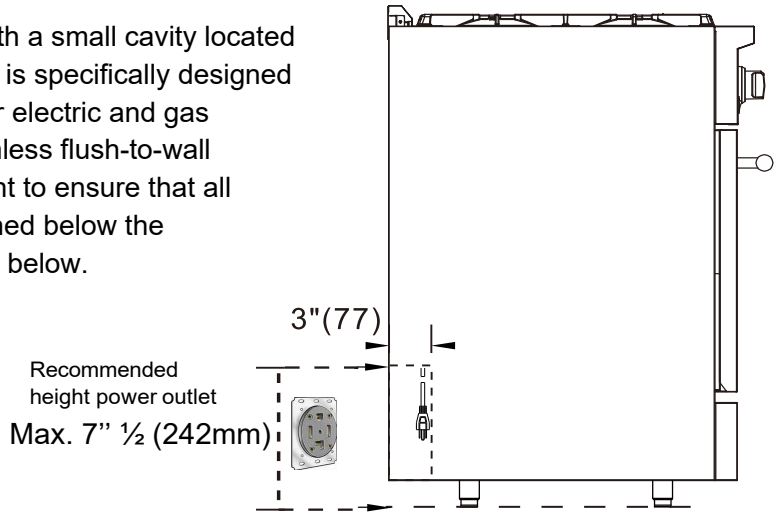

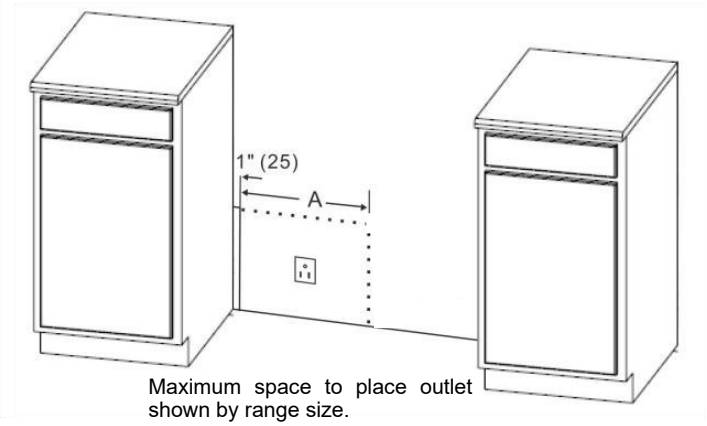

	30 inch	36 inch	48 inch	60 inch
A	28" (715)	34" (866)	46" (1169)	58"3/10 (1482)

⚠WARNING **Please note that the maximum height may vary if you adjust the height of the unit's legs. For accurate measurements, we recommend referring to the actual object rather than relying solely on reference materials.**

Pressure Regulator

Since service pressure may fluctuate with local demand, every gas cooking range must be equipped with a pressure regulator on the incoming service line for safe and efficient operation.
The pressure regulator preinstalled on the range has a gas inlet of 1/2" NPT for the 30", 36",48" & of 3/4" NPT for the 60".

Pressure regulator can withstand a maximum input pressure of 0.5 psi (3.5 kPa), and is set at 5" WC outlet pressure when used on NATURAL GAS and 10" WC outlet pressure when used on LIQUID PROPANE.

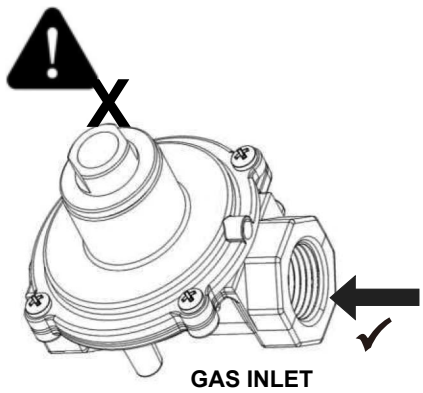

Pressure Regulator

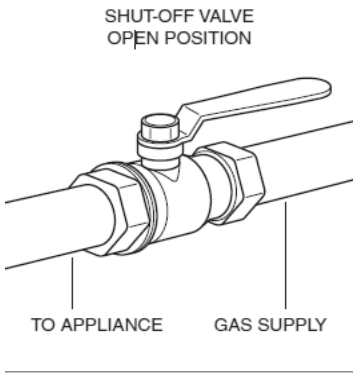

Gas Shut-off Valve

Gas Shut-off Valve (not included)

The supply line must be equipped with an approved external gas shut-off valve located near the range in an accessible location. Do not block access to the shut-off valve. Refer to the illustration below.
A 3/4" (19 mm) ID gas supply line must be connected to the range. If local codes permit, a certified, 3' (.9 m) long, 1/2" (13 mm) or 3/4" (19 mm) ID flexible metal gas line is recommended to connect the unit's 1/2" NPT (30", 36", 48") or 3/4" NPT (60") female inlet to the gas supply line. Pipe joint compounds suitable for use with natural or LP gas should be used.
The appliance and its shut-off valve must be disconnected from the gas supply piping system during must be isolated from the gas supply piping system by closing its individual manual shutoff valve during any pressure testing of the system at test pressures equal to or less than 0.5 psi (3.5 kPa).

Product Dimensions and Cabinets

Model#: FFSGS6125-30 / FFSGS6125-30BLK / FFSGS6125-30WHT

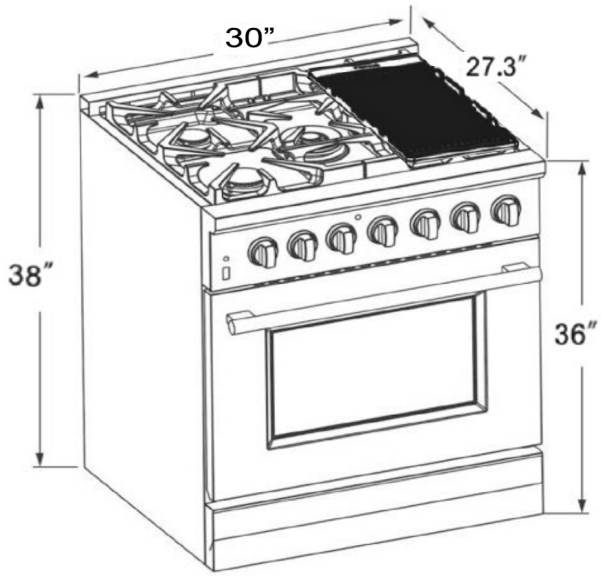

Model#: FFSGS6125-36 / FFSGS6125-36BLK / FFSGS6125-36WHT

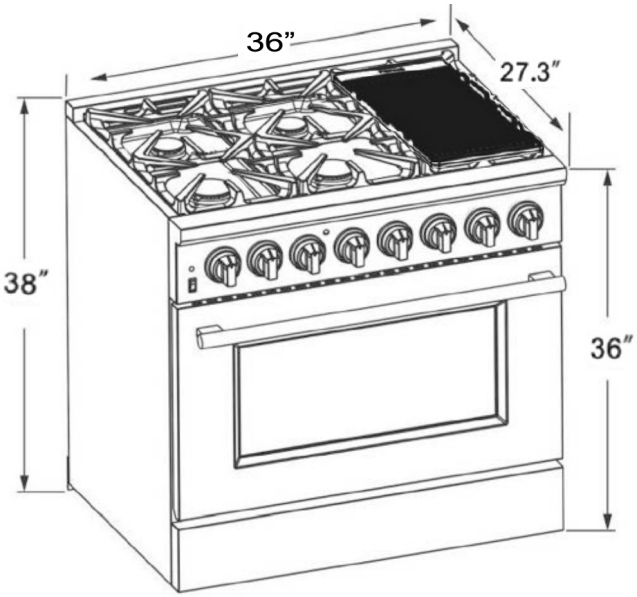

Model#:

FFSGS6125-48
FFSGS6125-48BLK
FFSGS6125-48WHT

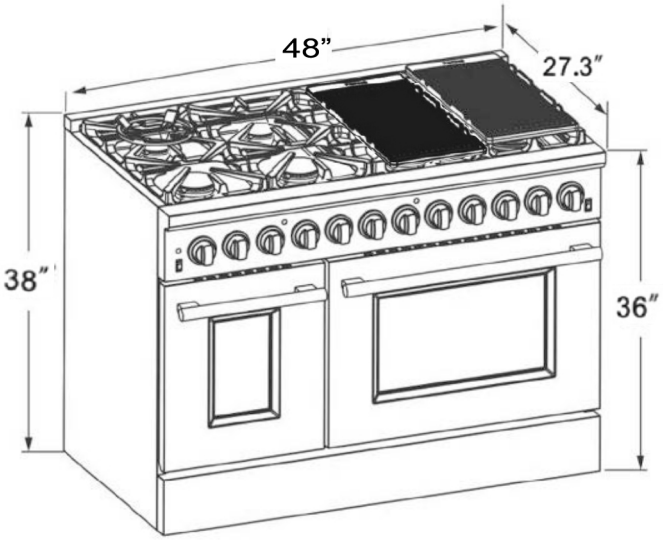

Model#: FFSGS6125-60

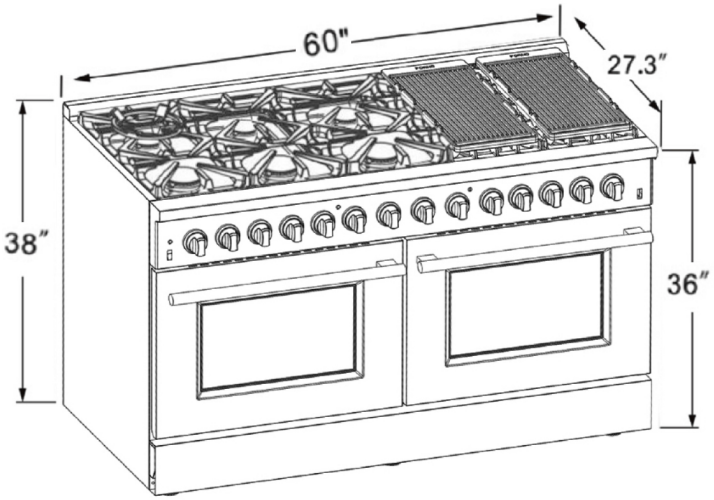

This range may be installed directly adjacent to existing countertop-height cabinets (36" or 91.5 cm from the floor). To achieve the best look, the cooktop should be level with the cabinet countertop. This can be accomplished by raising the unit using the adjustment spindles on the legs.

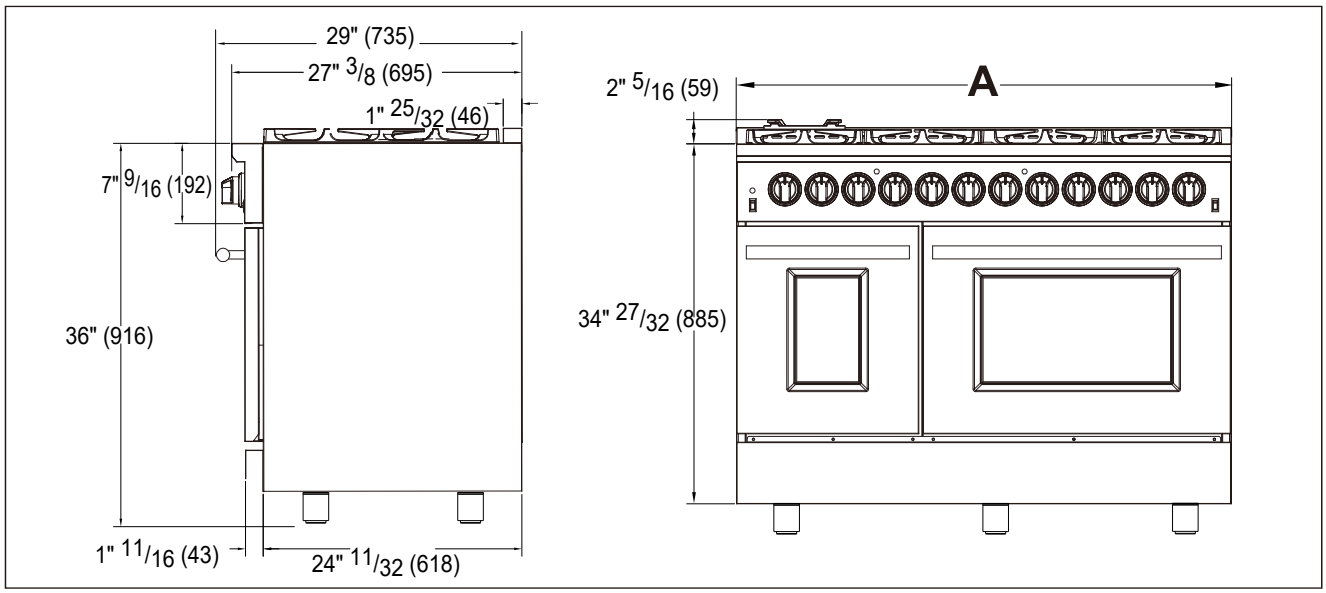

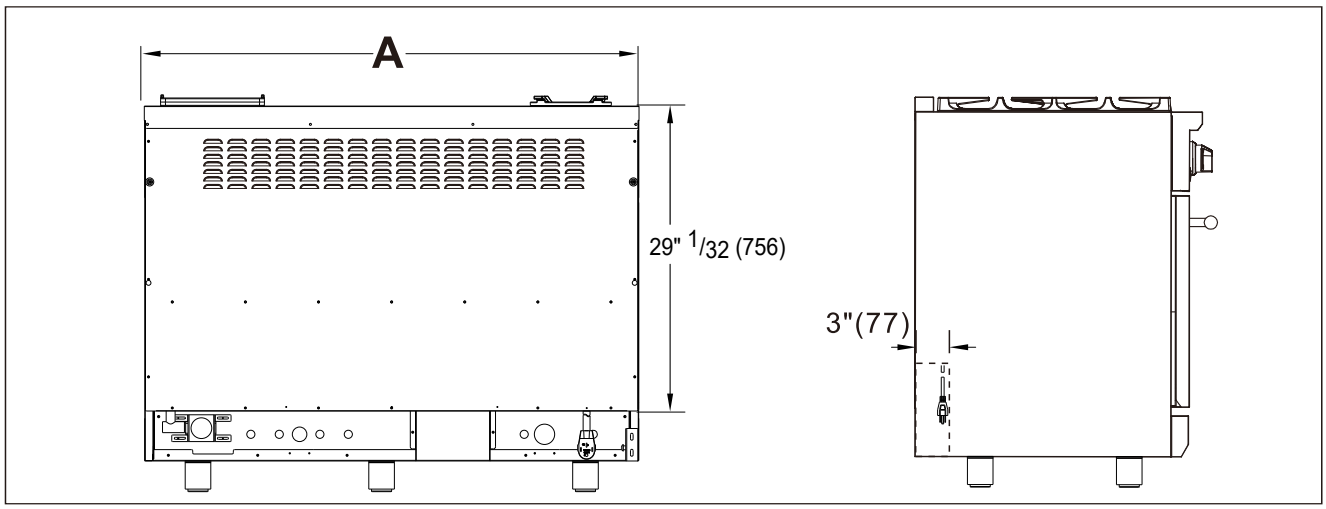

Wall-against mat

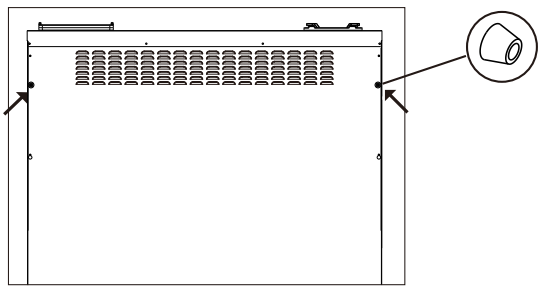

1/ Remove the two screws in the back of the range.
2/ Install the wall-against mat instead.

	30 inch	36 inch	48 inch	60 inch
A	30"(763)	36"(915)	47" 15/16 (1218)	59" 27/32 (1520)

Model#:

FFSGS6125-30
FFSGS6125-30BLK
FFSGS6125-30WHT

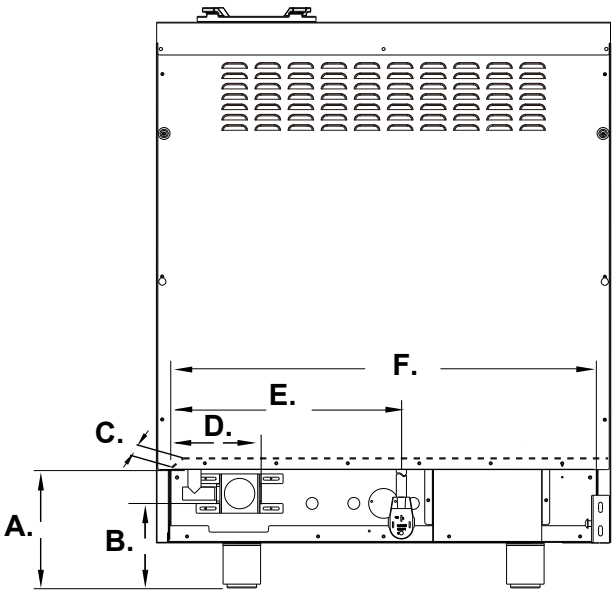

A.	B.	C.	D.	E.	F.
Min. 7'' 4/5 (199mm) Max. 9'' ½ (242mm)	Min. 5'' 3/5 (142mm) Max. 7'' 3/10 (185mm)	3'' (77mm)	5'' 4/5 (149mm)	15'' 1/5 (387mm)	28'' (715mm)

Model#:

FFSGS6125-36
FFSGS6125-36BLK
FFSGS6125-36WHT

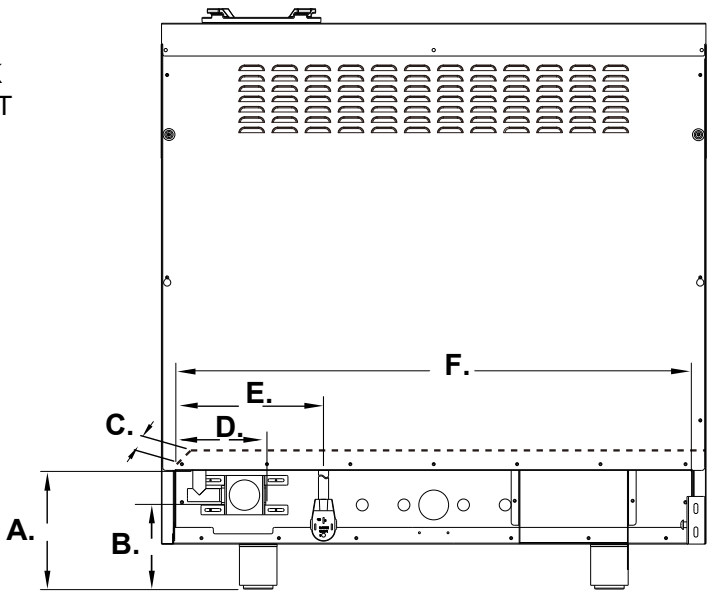

A.	B.	C.	D.	E.	F.
Min. 7'' 4/5 (199mm) Max. 9'' ½ (242mm)	Min. 5'' 3/5 (142mm) Max. 7'' 3/10 (185mm)	3'' (77mm)	5'' 4/5 (149mm)	9'' 4/5 (248mm)	34'' (866mm)

Model#:

FFSGS6125-48
FFSGS6125-48BLK
FFSGS6125-48WHT

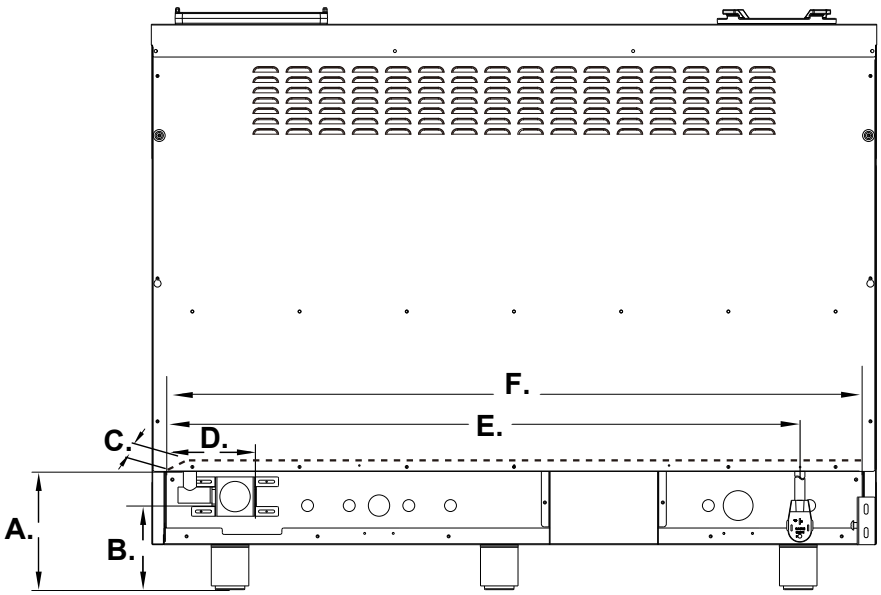

A.	B.	C.	D.	E.	F.
Min. 7'' 4/5 (199mm) Max. 9'' ½ (242mm)	Min. 5'' 3/5 (142mm) Max. 7'' 3/10 (185mm)	3'' (77mm)	5'' 4/5 (149mm)	41'' 9/10 (1064mm)	46'' (1169mm)

Model#: FFSGS6125-60

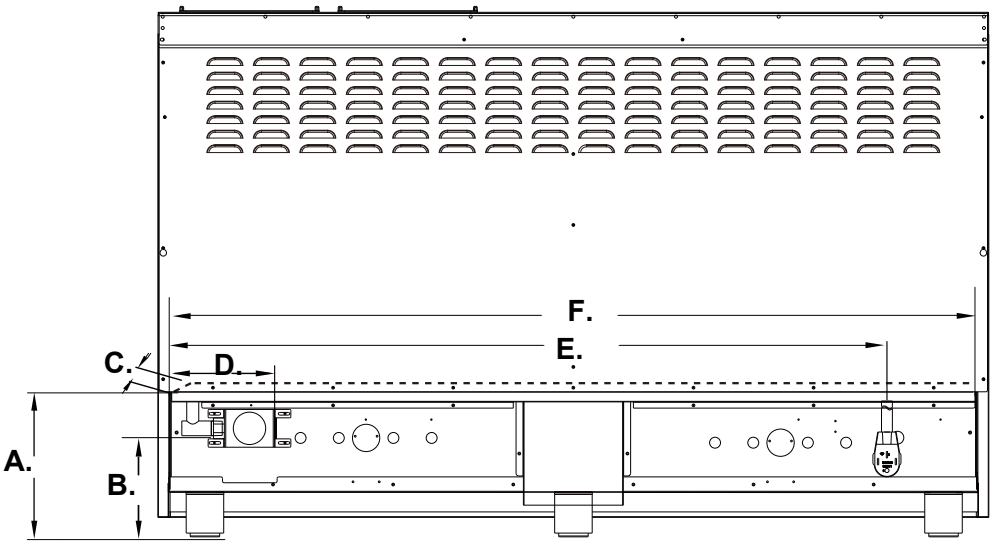

A.	B.	C.	D.	E.	F.
Min. 7'' 4/5 (199mm) Max. 9'' ½ (242mm)	Min. 5'' 3/5 (142mm) Max. 7'' 3/10 (185mm)	3'' (77mm)	5'' 4/5 (149mm)	52'' (1320mm)	58'' 3/10 (1482mm)

Minimum to cabinets on either sides of the range

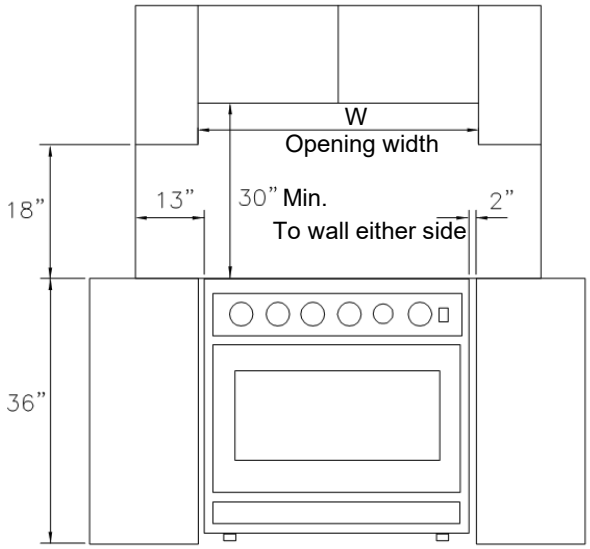

Maximum depth for cabinets above countertop

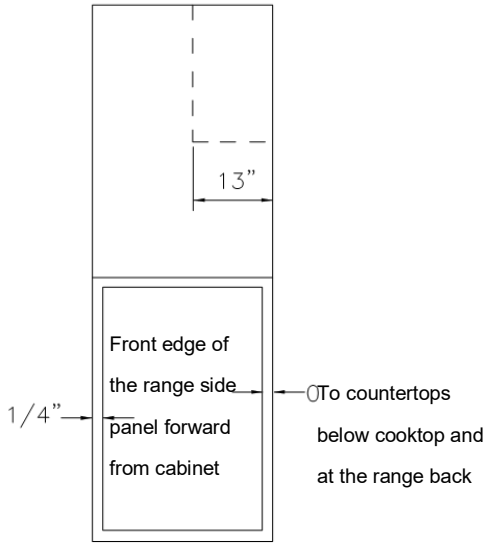

Opening width	W
30" Model	30" (762mm)
36" Model	36" (914mm)
48" Model	48" (1219mm)
60" Model	60" (1520mm)

Exhaust Hood Installation

The bottom of the hood should be 30" min. to 36" above the countertop. This would typically result in the bottom of the hood being 66" to 72" above the floor. These dimensions provide safe and efficient operation of the hood.

After Installation:

1. Check ignition of cooktop burners.
2. Check the air shutter adjustment – sharp blue flame, with no yellow tipping or lifting flames.
3. Check ignition of oven burner.
4. Visually check tubular burner (oven burner) re-ignition to be sure both rows of burner ports are relighting each time.
5. Check for gas leaks at all gas connections (using a gas detector, never a flame).
6. Check oven bake and convection bake function.

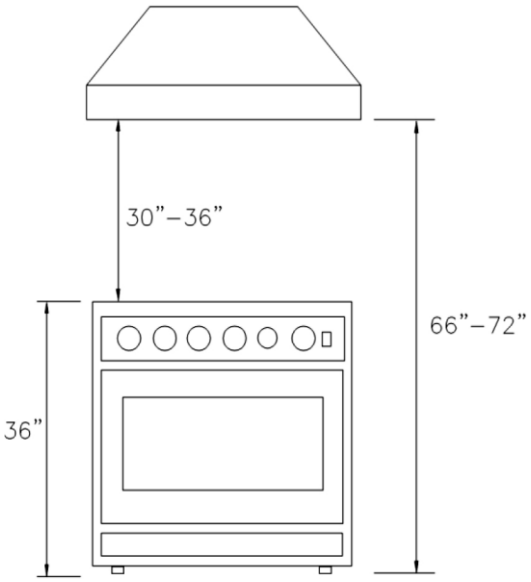

Gas Conversion Operation

This cooking range can be used with LP gas and NG gas. It is shipped from the factory adjusted for use with NG(Nature Gas). Injector for LP gas are included. Follow the instruction shown below for gas conversion.

⚠WARNING Gas conversion shall be conducted by a trained professional. Contact a local professional to complete this procedure. If this procedure isn't completed by a professional, the warranty can be voided. Forno has the right to ask for a proof (invoice from the professional) when there is signs of an improper conversion.

⚠WARNING **Before carrying out this operation, disconnect the range from gas and electricity.**

Fail to do so, may result in fire, or electrical shock hazard can occur and result in injury or death. Do not remove regulator or allow it to turn during servicing.

The gas conversion procedure for this range includes 5 steps:

1. Pressure regulator
2. Cooktop burners
3. Gas valve
4. Reconnect Gas and Electrical Supply
5. Installation of new rating label

The conversion is not completed if all 5 steps have not been concluded properly.
Before performing the gas conversion, locate the package containing the replacement nozzles shipped with every range.

STEP 1: Pressure Regulator
To access the gas regulator, pull the range away from the cabinet wall. The gas regulator is located at the bottom back left corner of the range.

a. Unscrew the cap from the regulator.

b. Unscrew the brass insert from the cap. Do not remove the spring from the brass insert. Rotate the brass insert with the fully extended spring 180° and screw back the brass insert on the cap. Insert the cap with the spring first into the regulator. Make sure the cap is fully tighten on the regulator, if not done correctly a gas leak can occur.

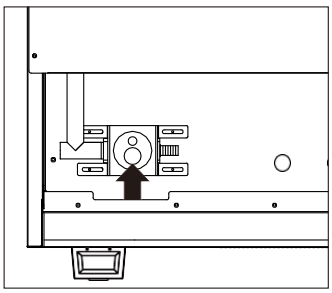

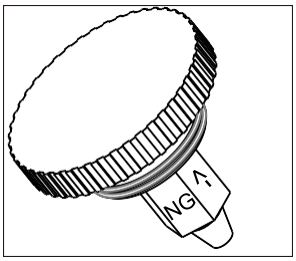

Position NG

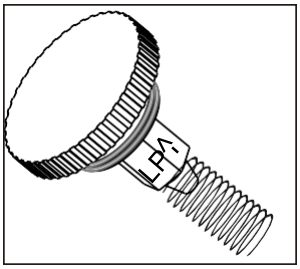

Position LP

STEP 2: Cooktop Burners
a. Remove cooking grills and burner caps.
b. Lift off outer burner spreader and burner bases.
c. Remove the factory installed natural gas nozzles from the center of the nozzle holders using a 7mm socket wrench. Replace the LP injector in each nozzle holder. Tighten each injector properly. **Do not to over tighten the injector.**

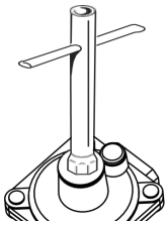

Socket wrench

⚠CAUTION **Handle carefully when removing and replacing gas components. Use proper support to prevent damage to components.**

IMPORTANT: Each injector has a number indicating its flow diameter printed on the body. Consult the table below for matching nozzles with cooktop burners.

	COOKTOP BURNERS		
ORIFICE FOR NATURAL GAS (NG) & LIQUID PROPANE (LP)	**A. 9,000BTU**	**B.15,000BTU**	**C.20,000BTU**
NG	1.33	1.75	1.38 x 2 (OUTER) 0.75 x 1 (CENTER)
LP	0.9	1.18	0.9 x 2 (OUTER) 0.46 x 1 (CENTER)

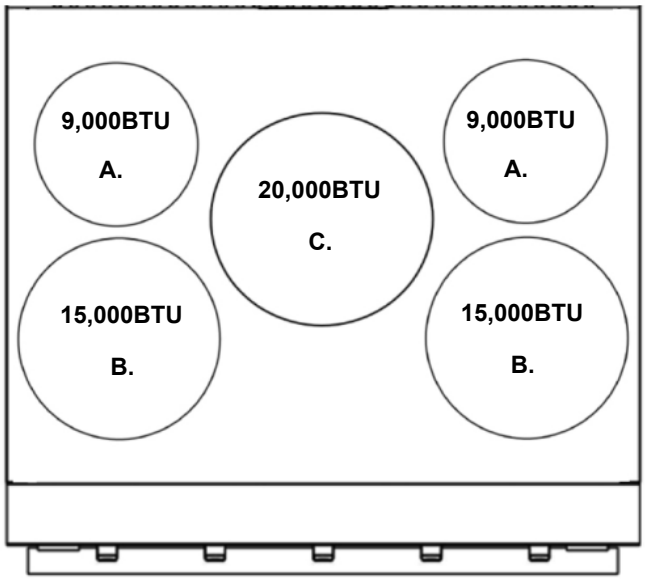

Model: FFSGS6125-30
FFSGS6125-30BLK
FFSGS6125-30WHT

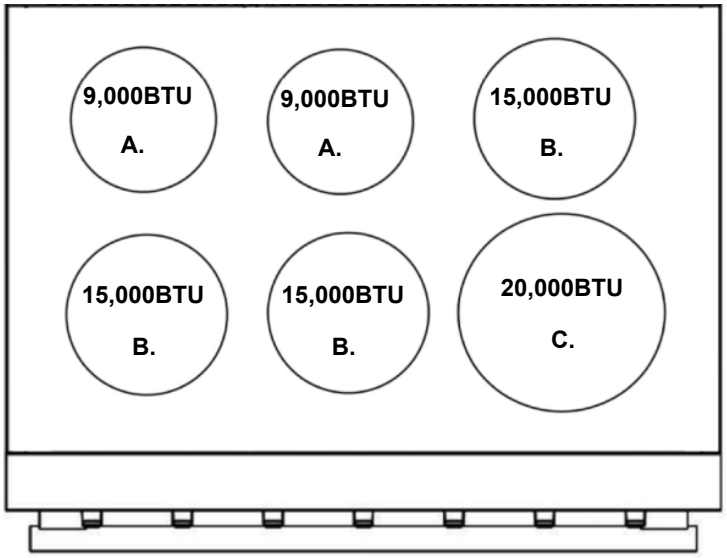

Model: FFSGS6125-36
FFSGS6125-36BLK
FFSGS6125-36WHT

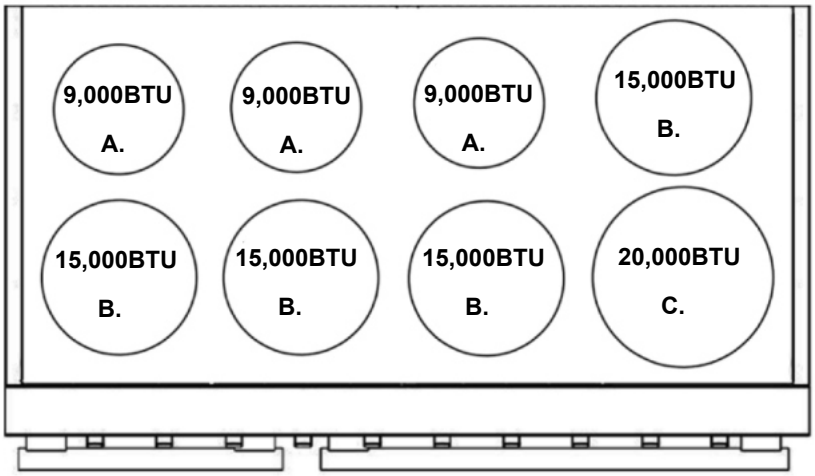

Model: FFSGS6125-48
FFSGS6125-48BLK
FFSGS6125-48WHT

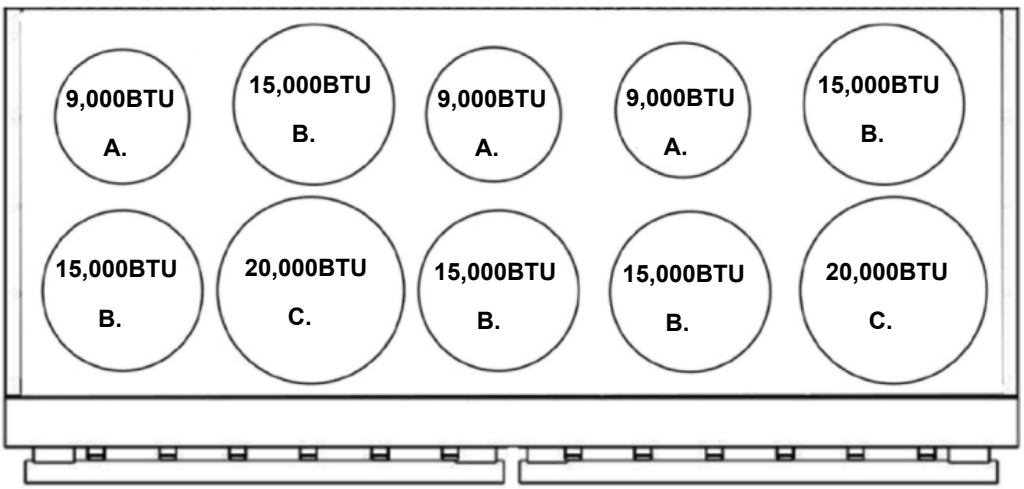

Model:FFSGS6125**-60**

IMPORTANT: Keep the injectors removed from the range for future use.

STEP 3: Gas Valve

a. Remove control knobs.

b. Using a flat screwdriver, adjust main burner bypass jets toward to 1/4 circle for LP until the flame is normal. For 9,000btu and 15,000btu burners, please refer to fig.1, which is in the center of valve axis. For 20,000btu burners, please refer to fig.2, which is in the left side of valve axis.

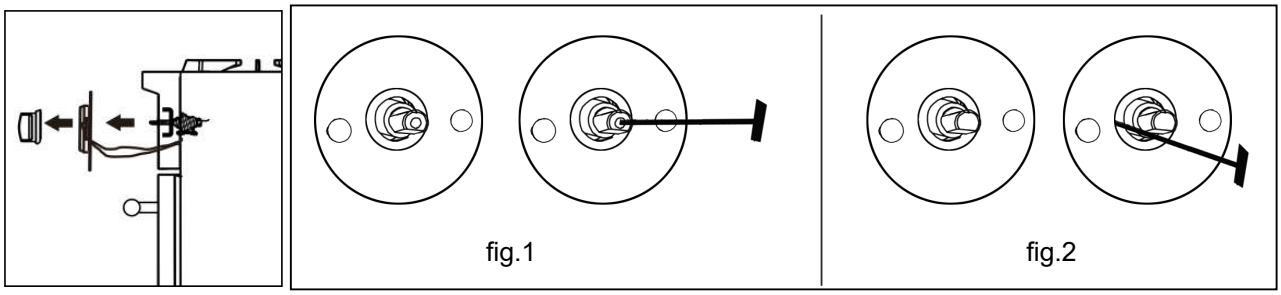

STEP 4: Reconnect Gas and Electrical Supply

Leak testing of the range shall be conducted according to the installation instructions provided with the range.

Before operating the range after the gas conversion, always check for leaks with a soapy water solution or other acceptable method in at gas connections installed between the gas inlet pipe of the range, gas regulator, and the manual shut-off valve.

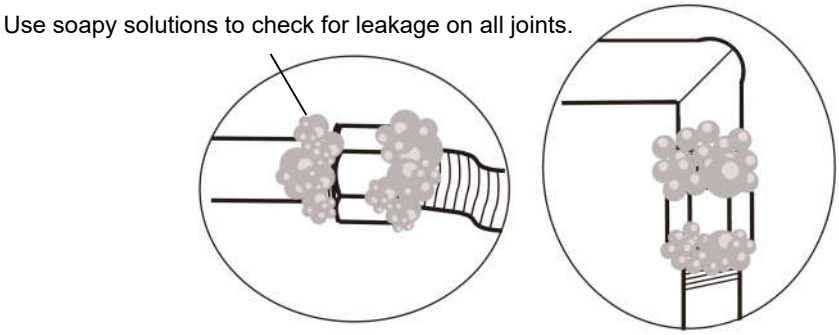

⚠WARNING DO NOT use a flame to check for gas leakage.

STEP 5: Installation of New Rating Label

Record the model and serial number on the LP / Propane conversion label provided in this kit.

The information can be obtained from the existing Rating / Serial label. Place the LPG conversion label as close as possible to the existing Rating / Serial label on the range.

Preparation

Before moving the range, protect any finished flooring and secure oven door(s) closed to prevent damage. The oven door(s) can be removed to lighten the load or to fit the unit through a doorway. Only remove if necessary. Do not remove the griddle or any other component. Door removal should only be done by a certified installer or service technician.

Placement

Do not lift or carry the oven door by the door handle.

Use an appliance dolly to move the range near the opening. Remove and recycle packing materials. Do not discard the anti-tip bracket supplied with the range.

Leveling

Raise the range to the desired height by adjusting the legs. The legs can be adjusted by rotating the metal leg clockwise to raise and counter clockwise to lower.

Anti-Tip Bracket

To prevent the range from tipping forward, the anti-tip bracket must be installed. Refer to the section of ANTI-TIP DEVICE.

Gas Supply Connection

All connections to the gas piping must be wrench-tightened. Do not overtighten or allow pipes to turn when tightening.

When all connections have been made, check that all range controls are in the “OFF” position and turn on the main gas supply valve.

If a flexible metal connector is being used, verify it is not kinked, then attach the gas supply line to the regulator on the range. Open the valve and check for leaks by placing a liquid detergent solution onto all gas connections. Bubbles around connections indicate a gas leak. If a leak appears, close the shut-off valve and adjust connections.

Leak testing of the appliance shall be conducted according to the manufacture’s instructions. Use some soap water (50% water and 50% soap) or a leak detector at all joints and connections to check for leaks in the system. Do not use a flame to check for gas leaks.

The appliance must be isolated from the building’s gas supply piping system by closing its individual manual shut-off valve during any pressure testing of the gas supply piping system at test pressure equal to or less than 0.5 psi (3.5kPa).

DO NOT Forget Before Getting Started

- Remove the exterior and interior packing.
- Clean the range thoroughly with hot water and a mild detergent. Rinse and dry with a soft cloth to remove any residual oil and grease left over from the manufacturing process.
- Check that surface burner components are assembled correctly.
- Furnish the interior of the oven by inserting the shelves and tray.
- The range mounted on its legs.
- Have the anti-tip device been properly installed.
- Ground the electricity properly.
- Connect the gas service line following the directions of the manufacturer.
- Check the gas connection for leaks.
- Make sure the range been set for the type of gas available in the household.
- Make sure the flame appear sharp blue, with no yellow tipping, shooting or flame lifting.
- Adjust the minimum setting for all burners.

Cooktop Operation

The burner assembly contains all accessories in one set. The burner cap must be seated on the burner horizontally. Refer to the illustration.

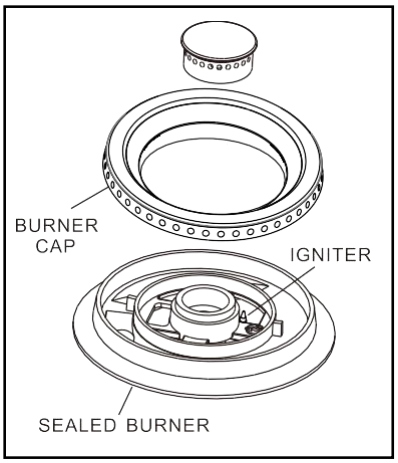

Ignition

To light up the cooktop burners, push and turn the appropriate control knob counter clockwise to “Hi” position. You will hear a clicking noise –the sound of ignition pin sparking.

Once burner ignition has been achieved, turn the burner control knob to adjust to desired flame intensity.

Heat Settings:

Hi	Ignites the burners.
Simmer	Melting small quantities, steaming rice, warming food, melting chocolate or butter.
Low	Melting large quantities.
Low-Medium	Low-temperature frying, simmering large quantities, heating milk, cream sauces, gravies.
Medium	Sauting and browning, braising, pan-frying, maintaining slow boil on large quantities.
Medium-Hi	High-temperature frying, pan boiling, maintaining slow boil on large quantities.
Hi	Boiling liquid quickly, deep frying.

⚠CAUTION Never leave pans on a high setting unattended. Be careful when cooking food in fat or grease; it can become hot enough to ignite.

Simmer and Boil

A smaller flame will give the best results when simmering. Small flames offer precise cooking performance for delicate foods, keeping food warm, melting chocolate or butter, and for cooking over low heat for long period of time.

The highest (larger) flame settings provide the maximum heat that is available on your range. This setting should be used for heavy cooking jobs such as boiling water and cooking pasts.

Please Note: Only the 20,000BTU burner can reach a simmer flame to the minimum setting.

flame intensity

• When you adjust the flame intensity, watch the flame when you turn the knob.

• Any flame engulfs the cookware is wasted.

• The flame should stay steady and blue in color. Impurity in the gas supply may cause an orange flame during initial operation.

Power Failure

• If the gas does not ignite within four seconds, turn off the valve and allow at least five minutes for any gas to dissipate. Repeat the lighting procedure.

• In the event of a power failure, the surface burners can be lighted manually. Hold a lighted match near a burner and turn the knob counter-clockwise to “HI”. After burner lights, turn knob to the desired setting.

Burner Grates

1. The grills must be properly positioned before cooking. Improper installation of the grills may result in scratching of the cooktop and / or poor combustion.
2. Do not operate the burners without a pan or utensil on the grills.

NOTE: There are 4 grates on the 48-inch unit, and 3 grates are the same. One grate is slightly wider than the other. There are five grates on the 60-inch unit, two of which are slightly wider than the others. The unique grille is wider on one side than on the other. The wider side needs to lap the middle joint of the stove surface to form a continuous grate.

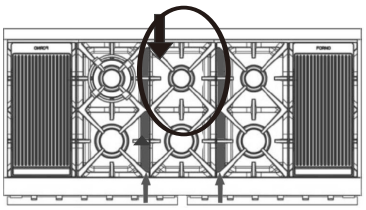

60" 48"
60"

Griddle Operation (available on the 48” and 60" models)

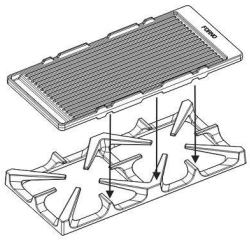

Before Using the Griddle

1. Clean the griddle thoroughly with warm, soapy water to remove dust or any protective coating.
2. Rinse with clean water and wipe off to dry with soft, clean lint-free towel/cloth.
3. If you're using the griddle to cook at the maximum position, you may notice that the 20,000 BTU burner keeps clicking. To prevent this from happening, try adjusting the fire to a lower position. This should eliminate the issue.

Use of the Cook plate (Griddle)

Your **FORNO** range may have come with a standard reversible grill/griddle. For best use and results please read below.

Pre-heat gently - Because the FORNO grill/griddle is so large it can take time for it to heat evenly. Once it's up to temp it will stay there for a long time! We recommend starting with your range set to low heat and gradually increasing the heat until you get to your target temp. It's easier to make a grill hotter once it's already warmed up, by pre-heating slowly you can control the heat more easily. To be efficient with your time you can start the pre-heating process while you're getting your ingredients together. It typically takes 10-15 minutes to completely pre-heat the FORNO grill/griddle this when pre-heating in this manner. Then enjoy your cooking experience on the FORNO grill/griddle

Start low and don't overheat! - You might get the urge to turn your burners up to full blast the first time you use the FORNO grill/griddle, but don't! Burners only need to be set to 1/3 to 1/2 power to heat the grill/griddle to over 500 degrees. Most chefs agree that the maximum cooking temperature you'll ever need is 500-550 degrees for searing a steak.

⚠CAUTION The surface of griddle and grills are hot after use. Please allow sufficient time for the griddle to cool before cleaning.

Air Fryer

To cook your food to the perfect crispy-golden results, please follow the next steps:

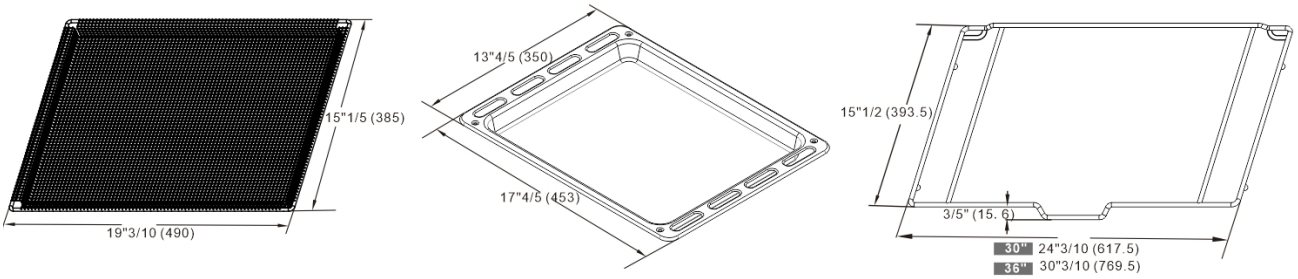

Air Fry Basket　　Baking pan　　Air Fry Rack

Step 1: Move 1 oven rack to the lowest position to hold the baking pan.
Step 2: Place the baking pan on the bottom rack.
Step 3: Put your food onto the air fry basket and spread it evenly in a single layer.
Step 4: Place the air fry basket, filled with your food on the air fry rack, and insert them inthe middle position of the oven shelf, then close the door.
Step 5: Turn on the convection fan and set theoven temperature between 325 ℉ and 350 ℉, and watch closely to the cooking food.

Tips:

1. Air Fry cooking requires little to no oil.
2. High-fat foods such as skin-on chicken wings, bacon or sausage can cause smoke whenusing the air fry component. Please add parchment paper or aluminum foil to the baking trayfor easy cleaning purpose.
3. Make sure the baking pan is right underneath of the air fry basket, working as the drip tray.
4. Check your food often, because air fry cooking requires less time than regular cooking.
5. Open a door or window to ensure the cooking area is well ventilated.

Steam Clean:
Step 1: Put 1 cup (240mL) of distilled or filtered water into the baking pan.
Step 2: Heat the oven to 450 ℉ for 20-30 minutes.
Step 3: Once the steam clean has completed, turn off your oven.
Step 4: When it's cool, wipe grease and debris from your oven using a damp rag or sponge.
Concentrate on removing only debris and grease that comes off easily. The steam cleaning process will loosen up the more stubborn, caked on grime.

Tips:

1.Using distilled or filtered water instead of water from your tap will keep your oven free of water spo and mineral deposits.

2.Be sure to wait until your oven is completely cool before starting to clean it.

3.Make sure to clean any racks that are in the oven as well.

4.Do not leave the residual water in the oven for any length of time.

5.This step may get pretty messy, so be sure to put on some old clothes and keep a garbage can nearb

Cooktop Cleaning Tips

• To prevent the cooktop from discoloring or staining, clean cooktop after each use, and wipe upacidic or sugary spills as soon as the cooktop has cooled.
• The sealed burners of your range are not secured to the cooktop and are designed to be removed. Boil overs or spills will not seep underneath the cooktop. The burners should be cleaned after each use.

Oven Light

The oven light is controlled by a push switch on the control panel.
The light can be used while cooking or cleaning the oven.

⚠WARNING Check that power is disconnected from the electrical box before replacing the light bulb. Allow the oven to cool completely, then disassemble the light cover and remove the light bulb by unscrewing it from the socket. Replace with a 40-watt halogen bulb.

LED Light Switch

Use the LED light switch to turn on the LED lights when the room becomes dark.

Oven Baking Operation

Oven Baking Tips

1. Never cover any slots, holes or passages in the oven bottom or cover an entire rack with materials such as aluminum foil. The aluminum foil lining may also trap heat, causing a fire hazard. Do not use aluminum foil on any porcelain surface. Doing so will damage the porcelain and affect its durability.
2. Position the racks before preheating the oven.
3. Reduce the oven temperature 25˚F (14˚C)when cooking in heat-proof glass or glass ceramic dishes.

⚠WARNING This range is designed for closed door cooking only. Always cook with the door closed.

ELECTRIC OVEN FUNCTIONS

Various oven functions allow the user to operate flexibly to achieve different cooking result.

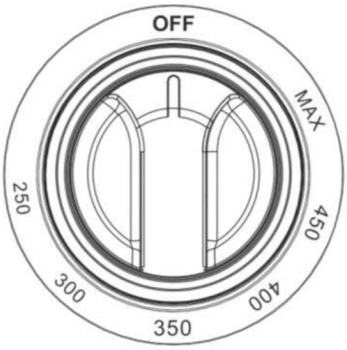

(Temperature control knob)

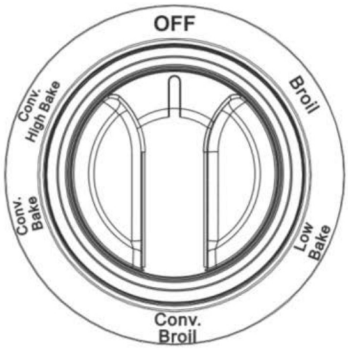

(Oven function knob)

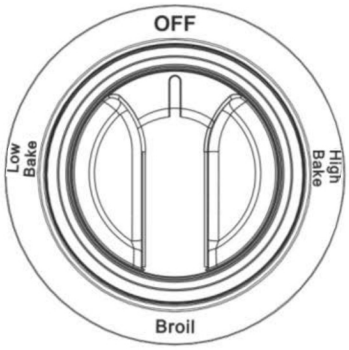

(for 18” oven only)

CONV. HIGH BAKE

The inner broil (1000W), bake (2000W) heating elements and the fan are working together under this function, for faster heat-up and shorter cooking times at lower temperatures. Better cooking results can be achieved with hot air circulating around the oven cavity evenly. Ideal for baking or cooking on up to 3 levels. Temperature setting from 250°F to MAX.

CONV. BAKE

Bake (2000W), convection fan (1500W) heating element. and the fan are working together under this function. Heat is distributed around the oven to allow getting extra bake at the bottom of pastries. Temperature setting from 250°F to MAX.

Professional Range Oven Cooking quick-start Guide !

Conv. Bake Function provides a more uniform heat result than a conventional oven (seal) quickly. Pre-heating is not necessary. This setting is ideal for batch baking or a complete meal. It is highly recommended for any cooking style, or for pre-heating.

CONV. BROIL

Inner broil (1000W), outer broil (1800W) heat elements and the fan are working under this function. Spreading heat evenly around the oven, allowing faster and better cooking results. To be used for roasting larger joints of meat or poultry on one level. Suitable for browning. Work with temperature setting at Maximum for broiling. It's normal for the inner part of the broil to glow less than the outside due to their difference in wattage.

LOW BAKE

Bake (2000W) heating element works under this function. Bake on one level. Suitable for cakes, muffins, pizzas, and delicate egg dishes. Temperature setting from 250°F to MAX.

BROIL

Inner broil (1000W) and outer broil (1800W) heat elements at the top are working under this function. It provides direct radiant heat onto the food. To be used for broiling large quantities of food and cook faster than the normal baking function. Temperature setting at Maximum. It's normal for the inner part of the broil to glow less than the outside due to their difference in wattage.

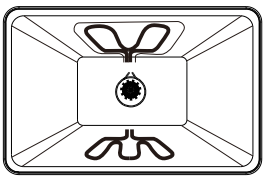

CONV. HIGH BAKE

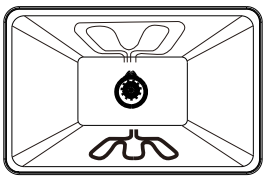

CONV BAKE

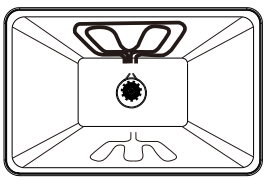

CONV BROIL

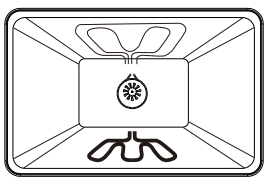

LOW BAKE

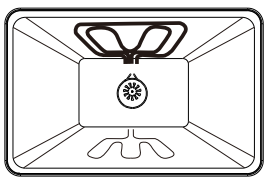

BROIL

Oven Temperature-control &Cooking times

The numbers on the control panel around the temperature control knob indicate the available oven temperature setting value (°F).
Turn the temperature control knob to select desired setting.

Cooking time will be various according to different kinds of food and quantity. With the cooking guide, it is highly recommended to watch on the entire steps carefully and study the suitable time for getting good cooking result before you get familiar.

Oven Cleaning Tips

1. After each use, and once cooled, clean splatters and spills immediately.
2. Do not allow foods with a high sugar or acid content to remain on the oven cavity surface.
3. Use an oven cleaner to clean the oven cavity.

Care and Maintenance Recommendations

Stainless steel	Use non-abrasive stainless steel cleaner, apply small amount to a soft cloth, slightly wipe the stainless steel surface, then towel dry. When wiping on the stainless steel surface, always follow the grain of the metal.
Burner grates	Remove and place on a flat surface near the sink. Clean with hot water and mild detergent or paste of baking soda and water. Do not immerse in water. Towel dry and rub lightly with olive oil. This help the grates keeping their shine and avoid any rust from appearing. Any leftover of water on the grates might result in rust or marks.
Burner pan	Remove surface debris before cleaning to help speed up the cleaning process and decrease the chance of scratching the surface during cleaning. Using mild abrasive cleaners or spray degreasers, clean and rinse the surface and dry immediately to avoid streaking. To clean hard water stains, use white vinegar and water. Rinse and dry immediately.
Surface burners	Allow to cool. Use mild detergent or spray degreaser to clean. Rinse with water and towel dry. **NOTE**: Pro-style gas range require a high level of maintenance, if the orifices are clog or that the burners dirty, they might stop working. If it's the case, remove them from, clean them thouroughly and remove any excess of water. **Forno** is not responsible for any maintenance related issues.
Control knobs	Using a damp cloth, wipe with a mild detergent or spray degreaser; rinse and dry. Do not put in dishwasher for cleaning.
Oven interior	Use mild abrasive cleaners, spray degreasers. Use a razor blade to gently remove baked on foods from oven cavity and window. For stubborn stains, spray with a mild abrasive cleaner or spray degreaser. Clean the entire oven cavity with soap and water.
Oven racks	To clean the upper rack, use mild detergent and a scouring pad. Rinse and dry. To clean the bottom pan, discard grease and wash with hot water and mild detergent. Rinse and dry. The rack is dishwasher safe. Do not place the porcelain-coated rack or pan in dishwasher for cleaning.

Troubleshooting Tips

Before you call for service

Range does not operate	Check that power is on. Check that electrical power to range and home circuit breaker is on.
Burners Do Not Light Or Spark Randomly	Electrical plug is not plugged into a live power outlet. Gas supply not turned on. Burner parts not replaced correctly. Holes in the simmer rings or slits in the burner rings are clogged. Clogged nozzles, or wet burners or electrodes. A fuse in your home may be blown or circuit breaker tripped.
Burners Have Yellow Or Yellow-Tipped Flames	Burner parts not replaced correctly. A. Yellow flames: Call for service. B. Yellow tips on outer cones: Normal for propane (LP) gas. C. Soft blue flames: Normal for natural gas. If burner flames look like (A), call for service. Normal burner flames should look like (B) or (C), depending on the type of gas.
Burner Flames Very Large Or Yellow	The range may be connected to the wrong fuel type. Contact the person who installed your range or made the conversion.
Burner Flames Contain Orange Flickers	Airborne dust; cool-mist humidifier; debris on or inside burner.
Oven Lights Do Not Work	The light bulb is defective. Unscrew the light cover inside the oven, replace the light with a 25-watt halogen bulb.
Oven Racks Are Hard To Slide	Do not spray with a cooking spray or other lubricant sprays. Remove all the packaging materials before use.
Food Does Not Bake Properly	The oven controls are improperly set. Make sure the oven temperature has been set properly. Oven is not preheated for sufficient time. Incorrect cookware or cookware of improper size being used. Baking racks in the wrong position. Use a foil tent to slow down scorching during roasting.
Food Does Not Broil Properly	The oven control knob is not set at BROIL position. Temperature control knob is not set at MAX position; Heating indicator will light intermittently. Improper baking rack position. This model is designed for closed door broiling only. Close the door. Always broil with the door closed. Cookware is not suited for broiling. Use the broiling pan and rack that came with your oven.
Oven Temperature Too Hot Or Too Cold	Need to adjust the oven knob temperature setting.
Steam From The Vent	When using the convection mode, it is normal that steam is coming out from oven vent. As the amount of food being cooked increases, the amount of visible steam will be increased.

Burning Or Oily Odor Emitting From The Vent	This is normal in a new oven and will disappear in some time.
Strong Odor	This is temporary. An odour caused by the insulation around the inside of the oven is normal for the first few times of use.
Convection Fan Not On All The Time	This is normal. The convection fan will be on automatically when the oven is too hot and off when the oven temperature is back to normal.
Condensation Or Fogging On The Inside of the Door Glass	Condensation or fogging on the inside of the oven door glass is normal during the preheating of the oven and will evaporate usually by the end of the preheating cycle.
Cracking Or Popping Sound During Cleaning	This is normal sound of metal expansion and contraction because of heating and cooling.
Excessive Smoking Occurs During Cleaning	The oven is heavily soiled. Turn the Oven Function Knob and the Temperature knob to OFF. Open the windows to exhaust the smoke. Wipe up excess soil and do the cleaning again.

PLEASE READ BEFORE USING YOUR OVEN

For Forno Commercial Style Ranges Models:
FFSGS6244, FFSGS6156, FFSGS6260, FFSGS6187,
FFSGS6239, FFSGS6125, FFSGS6291
Useful information for your oven:

- This oven is very powerful.
- To avoid burns, please use oven mitts when manipulation oven racks and be careful not to touch the oven door when in use.
- All knobs may reach 123F when oven is in use – although the standard regulations is max 148F please handle with care.
- For better Broil efficiency, pre-heat to MAX for 8 Minutes.

Cooking tips:
1- Pizza: Place rack on bottom level at 375F for 16 minutes then broil 2 to 3 minutes on top level.
2- Vegetables: Place rack second from bottom at 350F for 14 to 17 minutes.
3- Place rack on middle level at 350F for:
Fish: 4 to 6 minutes
Meats 10oz: 9-14 minutes
Chicken 8oz: 14-19 minutes
4- Turkey and Braised Meats:
Place rack at bottom level at 350F, no need to rise the cooking temperature above 350F for the first 20 minutes.

forno.ca
1-866-231-8893
info@forno.ca

Wire Diagram

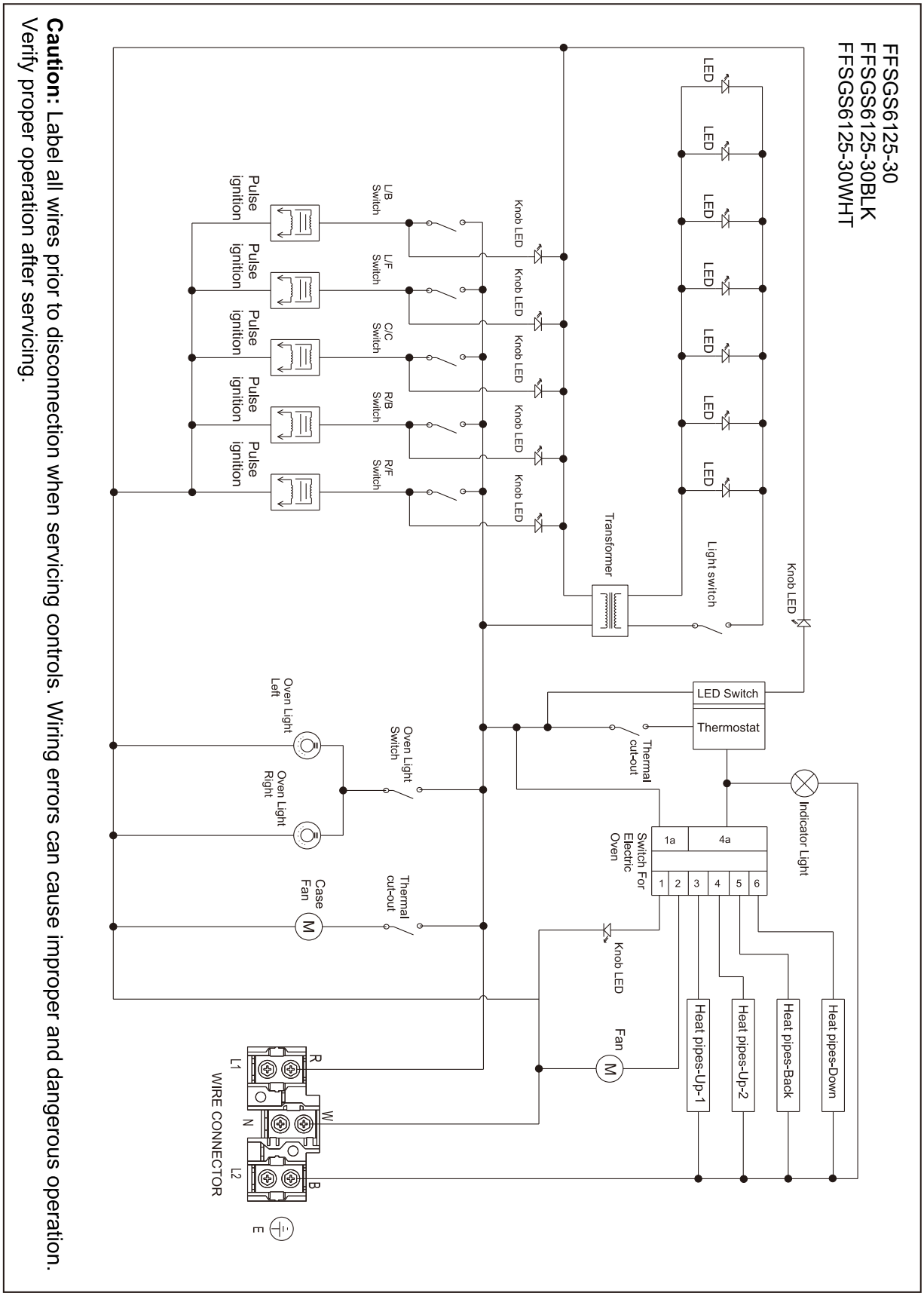

Caution: Label all wires prior to disconnection when servicing controls. Wiring errors can cause improper and dangerous operation. Verify proper operation after servicing.

FFSGS6125-36
FFSGS6125-36BLK
FFSGS6125-36WHT

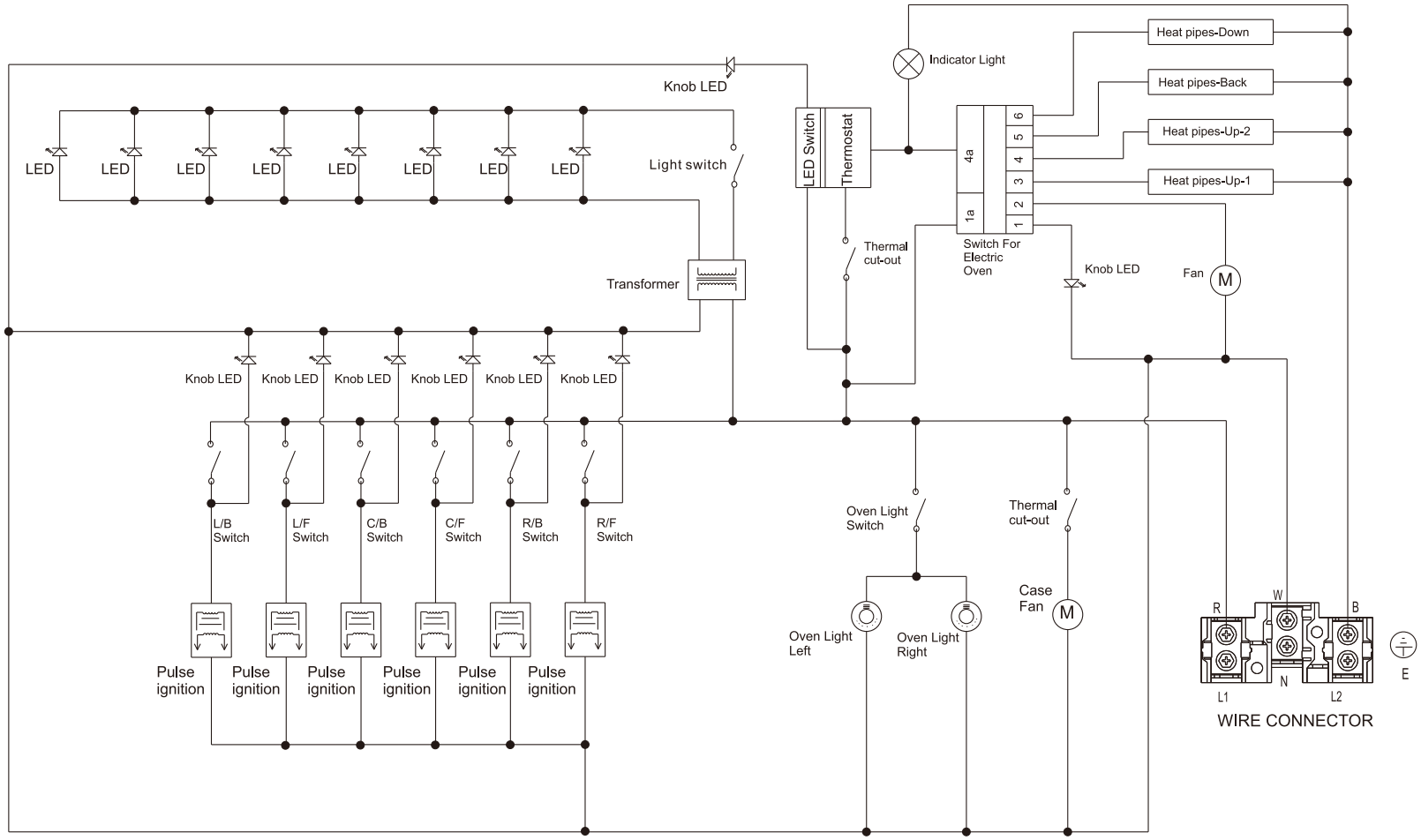

Caution: Label all wires prior to disconnection when servicing controls. Wiring errors can cause improper and dangerous operation. Verify proper operation after servicing.

FFSGS6125-48
FFSGS6125-48BLK
FFSGS6125-48WHT

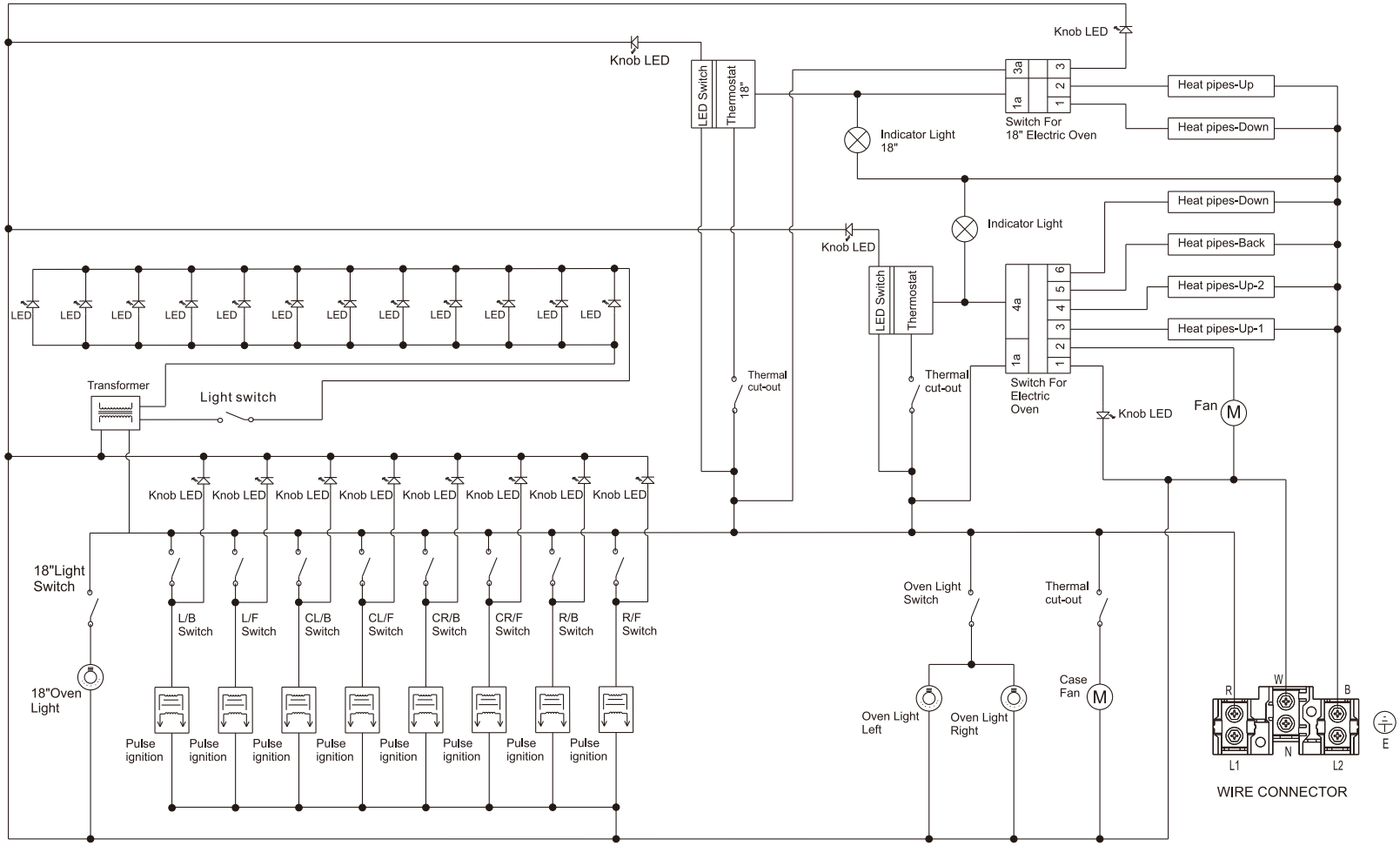

Caution: Label all wires prior to disconnection when servicing controls. Wiring errors can cause improper and dangerous operation. Verify proper operation after servicing.

FFSGS6125-60

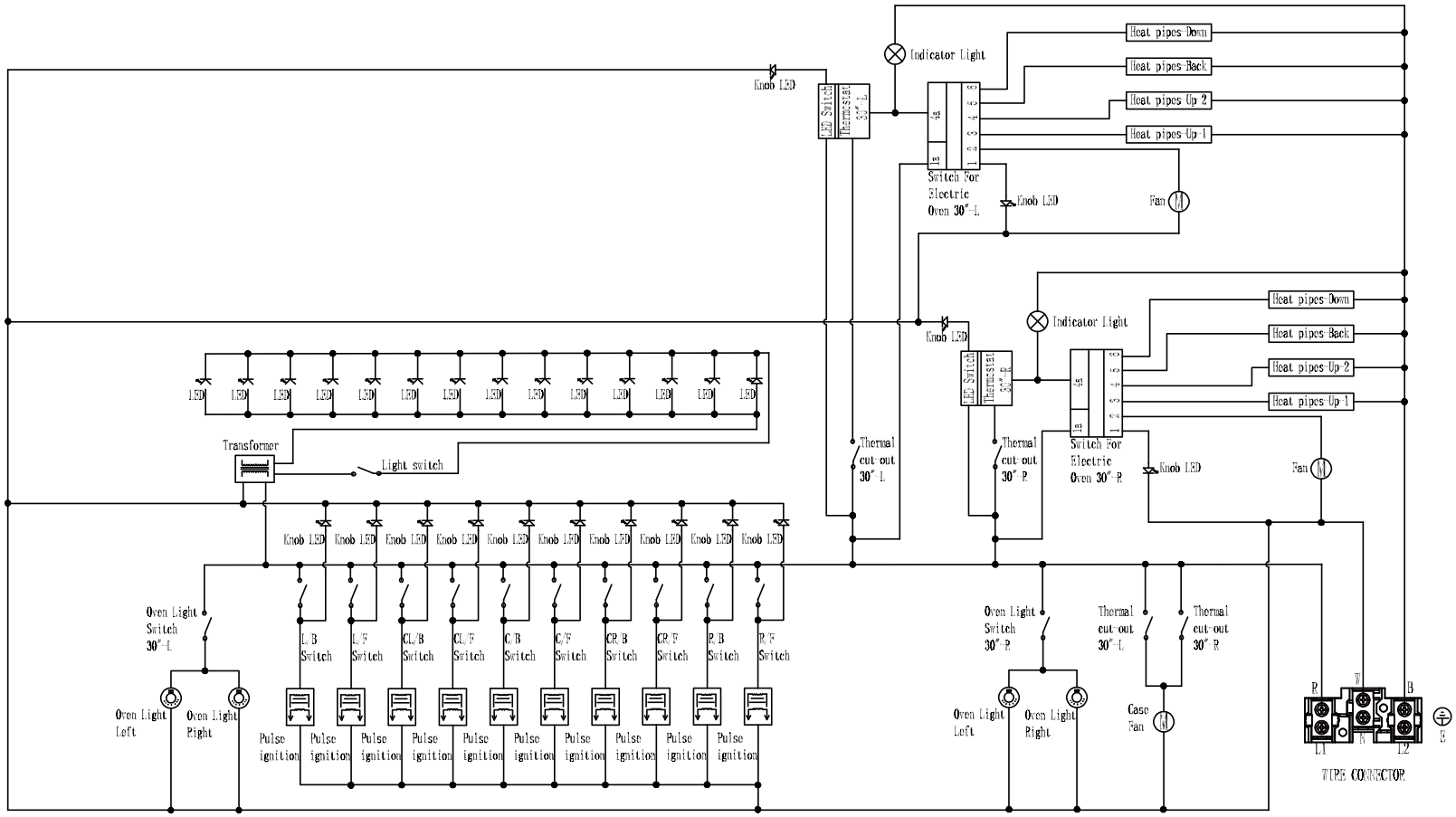

Caution: Label all wires prior to disconnection when servicing controls. Wiring errors can cause improper and dangerous operation. Verify proper operation after servicing.

FORNO®

Alta Qualita

FOR

FAST SUPPORT

EMAIL AT ***INFO@FORNO.CA***

Customer Support: Call 1-866-231-8893 or email: info@forno.ca