Forno Paolo 30 Inch Freestanding Electric Range Stainless Steel, 4.38 cu.ft, True Convection Oven, Energy Efficient

Model: FFSEL6011-30

KEY FEATURES

- 5 adiant burners deliver a total output of 7,800 watts
- The 100-watt warming burner keeps dishes at the perfect temperature
- Oven settings feature convectional bake and convectional broil
- True European Convection
- Dual-Element Broiler
- Smudge-Resistant Stainless-Steel Finish

FEATURES	
Type Convection	True European Convection
Oven Cleaning Type	Manual Cleaning
Oven Preheating Indicator	Yes
Storage Drawer	No
Racks material	Stainless Steel 430

OVEN MODES	
Bake	
Convection bake	Yes
Broil	Yes
Convection Broil	Yes
Convection High Bake	Yes
Low Bake	Yes
Oven Light(s) Control	Yes
Hidden Bake element	Yes

OVEN RACKS	
Rack Levels	5
Oven Racks	2
Rack Dimensions	24” W x 15” D

APPEARANCE	
Appliance type	Electric Range
Range Size	30”
Unit Material	Stainless Steel
Unit color	Stainless Steel
Handle Color	Stainless Steel
Number of burners	5
Number of Ovens	1
Case material	Stainless Steel

BURNER SIZE :	
Front Left :	12“
Front Right :	8”
Rear Center :	7“
Rear Left:	7“
Rear Right:	7”

CAPACITY	
Leveling Leg	Yes
Oven capacity	W: 22.8” H: 15.6” D: 16.9” cu. ft: 4.38

BURNER CAPACITY	
Front Left	3300 W
Front Right	2000 W
Rear Left	100 W
Rear Center	1200 W
Rear Right	1200 W
Bake Wattage	1800 W
Broiler Wattage	3000 W

TECHNICAL SPECIFICATIONS

Electrical supply	240 V 60 Hz
Total Amp Use	44.25
Power Cord	Yes
Certification	ETL Listed (Can & Us)
Warranty	2 yrs

PRODUCT DIMENSIONS & WEIGHT

Net Weight (lbs & kg)	216.5lbs | 98.2 kg
Product dimensions	W : 30” H: 38” D: 28.8”

CARTON DIMENSIONS & WEIGHT

Gross Weight (lbs & kg)	291.5” Lbs | 132.2 kg
Carton Dimensions (WxDxH-Inch)	32.6” x 29.9” x 44.3”
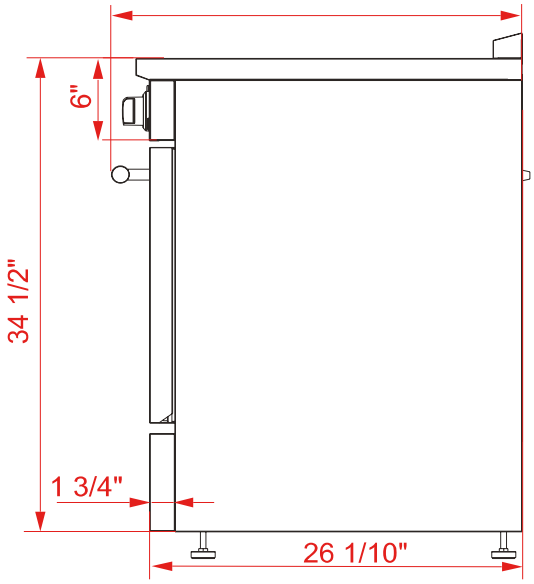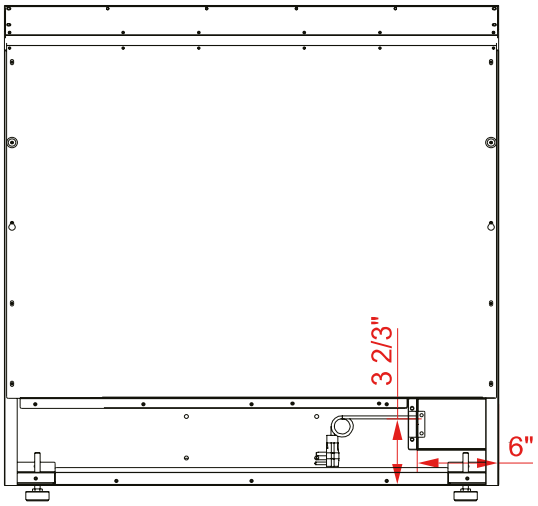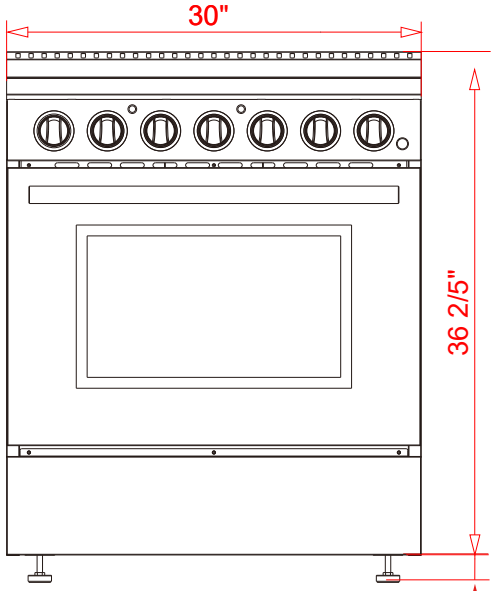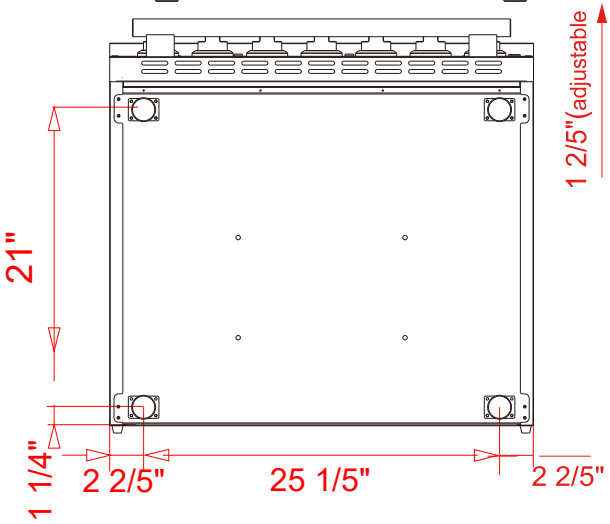
PRODUCT DIMENSION